N - NI

ALFA'R CONNECTORS

LISTA DE CÓDIGOS

CODE LIST

CODE CÓDIGO	Pág..
A-N-00-50	40
-00-75	40
-02-50	41
-02-75	41
-03-50	40
-03-75	40
-04-50	41
-04-75	41
-10C16-75	15
-10C18-50	15
-10C25-75	15
-10C25A-50	15
-10C26-50	15
-10C26B-75	15
-10C27-75	15
-10C45-75	15
-10C47-75	15
-10C50-50	15
-10C50A-50	15
-10C54-50	15
-10C55-50	15
-10C59-75	15
-10C60-75	15
-10C61-75	15
-10C61B-75	15
-10C61D-50	15
-10C67-75	15
-10C68-75	15
-10C74-75	15
-10C76-50	15
-10C76A-50	15
-10C77-75	15
-10C84-75	16
-10C88-75	16
-10C99-50	16
-10C100-50	16
-10C101-50	16
-10C102-75	16
-10C103-50	16
-10C103-50-A	16
-10C103A-75	16
-10C103A-75-A	16
-10C103D-50	16
-10C103D-50-A	16
-10C108-50	16
-10C108-50-A	16
-10C108A-75	16
-10C108A-75-A	16
-10C109-50	16
-10P25-75	18
-10P25A-50	18
-10P26-50	18
-10P26B-75	18
-10P50-50	18
-10P50A-50	18
-10P59-75	18
-10P60-75	18
-10P61-75	18
-10P61B-75	18
-10P61D-50	18
-10P100Z-50	12
-10P101-50	18
-10P102-75	18
-10P103-50	18
-10P103A-75	18
-10P103D-50	18
-10P108-50	18
-10P108A-75	18
-10P109-50	18
-10P139Z-50	12
-10P160Z-50	12
-10P280Z-50	12
-10S22X-50	9
-10S36X-50	9
-10S63X-50	9
-11C50-50	17
-11C50A-50	17
-11C54-50	17
-11C55-50	17
-11C61D-50	17
-11C76-50	17
-11C76A-50	17
-11C99-50	17
-11C100-50	17
-11C101-50	17
-11C103-50	17
-11C103D-50	17
-11C108-50	17
-11C109-50	17
-11P61D-50	19
-11P101-50	19
-11P25A-50	19

CODE CÓDIGO	Pág..
A-N-11P26-50	19
-11P50-50	19
-11P50A-50	19
-11P103-50	19
-11P103D-50	19
-11P108-50	19
-11P109-50	19
-11P160Z-50	14
-11P280Z-50	14
-11S22X-50	9
-11S36X-50	9
-11S63X-50	9
-12TF-50	35
-12TF-75	35
-12TR-50	38
-20C16-75	20
-20C18-50	20
-20C25-75	20
-20C25A-50	20
-20C26-50	20
-20C26B-75	20
-20C27-75	20
-20C45-75	20
-20C47-75	20
-20C50-50	20
-20C50A-50	20
-20C54-50	20
-20C55-50	20
-20C59-75	20
-20C60-75	20
-20C61-75	20
-20C61B-75	20
-20C61D-50	20
-20C67-75	20
-20C68-75	20
-20C74-75	20
-20C76-50	20
-20C76A-50	20
-20C77-75	20
-20C84-75	21
-20C99-50	21
-20C100-50	21
-20C101-50	21
-20C102-75	21
-20C103-50	21
-20C103-50-A	21
-20C103A-75	21
-20C103A-75-A	21
-20C103D-50	21
-20C103D-50-A	21
-20C108-50	21
-20C108-50-A	21
-20C108A-75	21
-20C108A-75-A	21
-20C109-50	21
-20P25-75	22
-20P25A-50	22
-20P26-50	22
-20P26B-75	22
-20P50-50	22
-20P50A-50	22
-20P59-75	22
-20P60-75	22
-20P61-75	22
-20P61B-75	22
-20P61D-50	22
-20P100Z-50	13
-20P101-50	22
-20P102-75	22
-20P103-50	22
-20P103A-75	22
-20P103D-50	22
-10P108-50	22
-10P108A-75	22
-20P109-50	22
-20P139Z-50	13
-20P160Z-50	13
-20P280Z-50	13
-20S22X-50	10
-20S36X-50	10
-20S63X-50	10
-22C16-75	23
-22C18-50	23
-22C25-75	23
-22C25A-50	23
-22C26-50	23
-22C26B-75	23
-22C27-75	23
-22C45-75	23
-22C47-75	23
-22C50-50	23
-22C50A-50	23

CODE CÓDIGO	Pág..
A-N-22C54-50	23
-22C55-50	23
-22C59-75	23
-22C60-75	23
-22C61-75	23
-22C61B-75	23
-22C61D-50	23
-22C67-75	23
-22C68-75	23
-22C74-75	23
-22C77-75	23
-22C84-75	24
-22C88-75	24
-22C99-50	24
-22C100-50	24
-22C101-50	24
-22C102-75	24
-22C103-50	24
-22C103A-75	24
-22C103D-50	24
-22C108-50	24
-22C108A-75	24
-22C109-50	24
-22P25-75	25
-22P25A-50	25
-22P26-50	25
-22P26B-75	25
-22P50-50	25
-22P50A-50	25
-22P59-75	25
-22P60-75	25
-22P61-75	25
-22P61B-75	25
-22P61D-50	25
-22P101-50	25
-22P102-75	25
-22P103-50	25
-22P103A-75	25
-22P103D-50	25
-22P108-50	25
-22P108A-75	25
-22P109-50	25
-22S22X-50	10
-22S36X-50	10
-22S63X-50	10
-22S63X-50-A	11
-22TF-50	35
-22TF-75	35
-22TP-50	37
-22TR-50	38
-25C16-75	26
-25C16-75-C	30
-25C16-75-F	28
-25C18-50	26
-25C18-50-C	30
-25C18-50-F	28
-25C25-75	26
-25C25-75-C	30
-25C25-75-F	28
-25C25A-50	26
-25C25A-50-C	30
-25C25A-50-F	28
-25C26-50	26
-25C26-50-C	30
-25C26-50-F	28
-25C27-75	26
-25C27-75-C	30
-25C27-75-F	28
-25C45-75	26
-25C45-75-C	30
-25C45-75-F	28
-25C47-75	26
-25C47-75-C	30
-25C47-75-F	28
-25C50-50	26
-25C50-50-C	30
-25C50-50-F	28
-25C50A-50	26
-25C50A-50-C	30
-25C50A-50-F	28
-25C54-50	26
-25C54-50-C	30
-25C54-50-F	28
-25C55-50	26
-25C55-50-C	30
-25C55-50-F	28
-25C59-75	26
-25C59-75-C	30
-25C59-75-F	28
-25C60-75	26
-25C60-75-C	30
-25C60-75-F	28

CODE CÓDIGO	Pág..
A-N-25C61-75	26
-25C61-75-C	30
-25C61-75-F	28
-25C61B-75	26
-25C61B-75-C	30
-25C61B-75-F	28
-25C61D-50	26
-25C61D-50-C	30
-25C61D-50-F	28
-25C67-75	26
-25C67-75-C	30
-25C67-75-F	28
-25C68-75	26
-25C68-75-C	30
-25C68-75-F	28
-25C74-75	26
-25C74-75-C	30
-25C74-75-F	28
-25C76-50	26
-25C76-50-C	30
-25C76-50-F	28
-25C76A-50	26
-25C76A-50-C	30
-25C76A-50-F	28
-25C77-75	26
-25C77-75-C	30
-25C77-75-F	28
-25C84-75	27
-25C84-75-C	31
-25C84-75-F	29
-25C88-75	27
-25C88-75-C	31
-25C88-75-F	29
-25C99-50	27
-25C99-50-C	31
-25C99-50-F	29
-25C100-50	27
-25C100-50-C	31
-25C100-50-F	29
-25C101-50	27
-25C101-50-C	31
-25C101-50-F	29
-25C102-75	27
-25C102-75-C	31
-25C102-75-F	29
-25C103-50	27
-25C103-50-C	31
-25C103-50-F	29
-25C103A-75	27
-25C103A-75-C	31
-25C103A-75-F	29
-25C103D-50	27
-25C103D-50-C	31
-25C103D-50-F	29
-25C108-50	27
-25C108-50-C	31
-25C108-50-F	29
-25C108A-75	27
-25C108A-75C	31
-25C108A-75-F	29
-25C109-50	27
-25C109-50-C	31
-25C109-50-F	29
-25S63X-50	11
-25S63X-50-F	11
-25TF-50	36
-25TF-50-C	36
-25TF-50-F	36
-25TF-75	36
-25TF-75-C	36
-25TF-75-F	36
-25TR-50	39
-25TR-50-C	39
-25TR-50-F	39
-26C16-75	32
-26C18-50	32
-26C25-75	32
-26C25A-50	32
-26C26-50	32
-26C26B-75	32
-26C27-75	32
-26C45-75	32
-26C47-75	32
-26C50-50	32
-26C50A-50	32
-26C54-50	32
-26C55-50	32
-26C59-75	32
-26C60-75	32
-26C61-75	32
-26C61B-75	32
-26C61D-50	32

CODE CÓDIGO	Pág..
A-N-26C67-75	32
-26C68-75	32
-26C74-75	32
-26C76-50	32
-26C76A-50	32
-26C77-75	32
-26C84-75	33
-26C88-75	33
-26C99-50	33
-26C100-50	33
-26C101-50	33
-26C102-75	33
-26C103-50	33
-26C103A-75	33
-26C103D-50	33
-26C108-50	33
-26C108A-75	33
-26C109-50	33
-26P25-75	34
-26P25A-50	34
-26P26-50	34
-26P26B-75	34
-26P50-50	34
-26P50A-50	34
-26P59-75	34
-26P60-75	34
-26P61-75	34
-26P61B-75	34
-26P61D-50	34
-26P101-50	34
-26P102-75	34
-26P103-50	34
-26P103A-75	34
-26P103D-50	34
-26P108-50	34
-26P108A-75	34
-26P109-50	34
-26S22X-50	11
-26S36X-50	11
-26S63X-50	11
-26TF-50	37
-26TF-75	37
-31-50	42
-31-75	42
-40-50	41
-40-75	41
-44-50	41
-44-75	41
-51-00	42
-51-00-A	42
-53-50	42
-53-50-A	42
-53-75	42
-53-75-A	42
-54-50	43
-54-50-A	43
-54-50-B	43
-54-50-C	43
-54-75	43
-55-50	43
-55-50-A	43
-55-75	43
A-NI-10C18-50	47
-10C25A-50	47
-10C26-50	47
-10C50-50	47
-10C50A-50	47
-10C54-50	47
-10C55-50	47
-10C61D-50	47
-10C99-50	47
-10C100-50	47
-10C101-50	47
-10C103-50	47
-10C103D-50	47
-10C108-50	47
-10C109-50	47
-15C18-50	48
-15C25A-50	48
-15C26-50	48
-15C50-50	48
-15C50A-50	48
-15C54-50	48
-15C55-50	48
-15C61D-50	48
-15C99-50	48
-15C100-50	48
-15C101-50	48
-15C103-50	48
-15C103D-50	48
-15C108-50	48
-15C109-50	48

LISTA DE CÓDIGOS

CODE LIST

CODE CÓDIGO	Pág..
A-N-00-50	40
-00-75	40
-02-50	41
-02-75	41
-03-50	40
-03-75	40
-04-50	41
-04-75	41
-10C16-75	15
-10C18-50	15
-10C25-75	15
-10C25A-50	15
-10C26-50	15
-10C26B-75	15
-10C27-75	15
-10C45-75	15
-10C47-75	15
-10C50-50	15
-10C50A-50	15
-10C54-50	15
-10C55-50	15
-10C59-75	15
-10C60-75	15
-10C61-75	15
-10C61B-75	15
-10C61D-50	15
-10C67-75	15
-10C68-75	15
-10C74-75	15
-10C76-50	15
-10C76A-50	15
-10C77-75	15
-10C84-75	16
-10C88-75	16
-10C99-50	16
-10C100-50	16
-10C101-50	16
-10C102-75	16
-10C103-50	16
-10C103-50-A	16
-10C103A-75	16
-10C103A-75-A	16
-10C103D-50	16
-10C103D-50-A	16
-10C108-50	16
-10C108-50-A	16
-10C108A-75	16
-10C108A-75-A	16
-10C109-50	16
-10P25-75	18
-10P25A-50	18
-10P26-50	18
-10P26B-75	18
-10P50-50	18
-10P50A-50	18
-10P59-75	18
-10P60-75	18
-10P61-75	18
-10P61B-75	18
-10P61D-50	18
-10P100Z-50	12
-10P101-50	18
-10P102-75	18
-10P103-50	18
-10P103A-75	18
-10P103D-50	18
-10P108-50	18
-10P108A-75	18
-10P109-50	18
-10P139Z-50	12
-10P160Z-50	12
-10P280Z-50	12
-10S22X-50	9
-10S36X-50	9
-10S63X-50	9
-11C50-50	17
-11C50A-50	17
-11C54-50	17
-11C55-50	17
-11C61D-50	17
-11C76-50	17
-11C76A-50	17
-11C99-50	17
-11C100-50	17
-11C101-50	17
-11C103-50	17
-11C103D-50	17
-11C108-50	17
-11C109-50	17
-11P61D-50	19
-11P101-50	19
-11P25A-50	19

CODE CÓDIGO	Pág..
A-N-11P26-50	19
-11P50-50	19
-11P50A-50	19
-11P103-50	19
-11P103D-50	19
-11P108-50	19
-11P109-50	19
-11P160Z-50	14
-11P280Z-50	14
-11S22X-50	9
-11S36X-50	9
-11S63X-50	9
-12TF-50	35
-12TF-75	35
-12TR-50	38
-20C16-75	20
-20C18-50	20
-20C25-75	20
-20C25A-50	20
-20C26-50	20
-20C26B-75	20
-20C27-75	20
-20C45-75	20
-20C47-75	20
-20C50-50	20
-20C50A-50	20
-20C54-50	20
-20C55-50	20
-20C59-75	20
-20C60-75	20
-20C61-75	20
-20C61B-75	20
-20C61D-50	20
-20C67-75	20
-20C68-75	20
-20C74-75	20
-20C76-50	20
-20C76A-50	20
-20C77-75	20
-20C84-75	21
-20C99-50	21
-20C100-50	21
-20C101-50	21
-20C102-75	21
-20C103-50	21
-20C103-50-A	21
-20C103A-75	21
-20C103A-75-A	21
-20C103D-50	21
-20C103D-50-A	21
-20C108-50	21
-20C108-50-A	21
-20C108A-75	21
-20C108A-75-A	21
-20C109-50	21
-20P25-75	22
-20P25A-50	22
-20P26-50	22
-20P26B-75	22
-20P50-50	22
-20P50A-50	22
-20P59-75	22
-20P60-75	22
-20P61-75	22
-20P61B-75	22
-20P61D-50	22
-20P100Z-50	13
-20P101-50	22
-20P102-75	22
-20P103-50	22
-20P103A-75	22
-20P103D-50	22
-10P108-50	22
-10P108A-75	22
-20P109-50	22
-20P139Z-50	13
-20P160Z-50	13
-20P280Z-50	13
-20S22X-50	10
-20S36X-50	10
-20S63X-50	10
-22C16-75	23
-22C18-50	23
-22C25-75	23
-22C25A-50	23
-22C26-50	23
-22C26B-75	23
-22C27-75	23
-22C45-75	23
-22C47-75	23
-22C50-50	23
-22C50A-50	23

CODE CÓDIGO	Pág..
A-N-22C54-50	23
-22C55-50	23
-22C59-75	23
-22C60-75	23
-22C61-75	23
-22C61B-75	23
-22C61D-50	23
-22C67-75	23
-22C68-75	23
-22C74-75	23
-22C77-75	23
-22C84-75	24
-22C88-75	24
-22C99-50	24
-22C100-50	24
-22C101-50	24
-22C102-75	24
-22C103-50	24
-22C103A-75	24
-22C103D-50	24
-22C108-50	24
-22C108A-75	24
-22C109-50	24
-22P25-75	25
-22P25A-50	25
-22P26-50	25
-22P26B-75	25
-22P50-50	25
-22P50A-50	25
-22P59-75	25
-22P60-75	25
-22P61-75	25
-22P61B-75	25
-22P61D-50	25
-22P101-50	25
-22P102-75	25
-22P103-50	25
-22P103A-75	25
-22P103D-50	25
-22P108-50	25
-22P108A-75	25
-22P109-50	25
-22S22X-50	10
-22S36X-50	10
-22S63X-50	10
-22S63X-50-A	11
-22TF-50	35
-22TF-75	35
-22TP-50	37
-22TR-50	38
-25C16-75	26
-25C16-75-C	30
-25C16-75-F	28
-25C18-50	26
-25C18-50-C	30
-25C18-50-F	28
-25C25-75	26
-25C25-75-C	30
-25C25-75-F	28
-25C25A-50	26
-25C25A-50-C	30
-25C25A-50-F	28
-25C26-50	26
-25C26-50-C	30
-25C26-50-F	28
-25C27-75	26
-25C27-75-C	30
-25C27-75-F	28
-25C45-75	26
-25C45-75-C	30
-25C45-75-F	28
-25C47-75	26
-25C47-75-C	30
-25C47-75-F	28
-25C50-50	26
-25C50-50-C	30
-25C50-50-F	28
-25C50A-50	26
-25C50A-50-C	30
-25C50A-50-F	28
-25C54-50	26
-25C54-50-C	30
-25C54-50-F	28
-25C55-50	26
-25C55-50-C	30
-25C55-50-F	28
-25C59-75	26
-25C59-75-C	30
-25C59-75-F	28
-25C60-75	26
-25C60-75-C	30
-25C60-75-F	28

CODE CÓDIGO	Pág..
A-N-25C61-75	26
-25C61-75-C	30
-25C61-75-F	28
-25C61B-75	26
-25C61B-75-C	30
-25C61B-75-F	28
-25C61D-50	26
-25C61D-50-C	30
-25C61D-50-F	28
-25C67-75	26
-25C67-75-C	30
-25C67-75-F	28
-25C68-75	26
-25C68-75-C	30
-25C68-75-F	28
-25C74-75	26
-25C74-75-C	30
-25C74-75-F	28
-25C76-50	26
-25C76-50-C	30
-25C76-50-F	28
-25C76A-50	26
-25C76A-50-C	30
-25C76A-50-F	28
-25C77-75	26
-25C77-75-C	30
-25C77-75-F	28
-25C84-75	27
-25C84-75-C	31
-25C84-75-F	29
-25C88-75	27
-25C88-75-C	31
-25C88-75-F	29
-25C99-50	27
-25C99-50-C	31
-25C99-50-F	29
-25C100-50	27
-25C100-50-C	31
-25C100-50-F	29
-25C101-50	27
-25C101-50-C	31
-25C101-50-F	29
-25C102-75	27
-25C102-75-C	31
-25C102-75-F	29
-25C103-50	27
-25C103-50-C	31
-25C103-50-F	29
-25C103A-75	27
-25C103A-75-C	31
-25C103A-75-F	29
-25C103D-50	27
-25C103D-50-C	31
-25C103D-50-F	29
-25C108-50	27
-25C108-50-C	31
-25C108-50-F	29
-25C108A-75	27
-25C108A-75C	31
-25C108A-75-F	29
-25C109-50	27
-25C109-50-C	31
-25C109-50-F	29
-25S63X-50	11
-25S63X-50-F	11
-25TF-50	36
-25TF-50-C	36
-25TF-50-F	36
-25TF-75	36
-25TF-75-C	36
-25TF-75-F	36
-25TR-50	39
-25TR-50-C	39
-25TR-50-F	39
-26C16-75	32
-26C18-50	32
-26C25-75	32
-26C25A-50	32
-26C26-50	32
-26C26B-75	32
-26C27-75	32
-26C45-75	32
-26C47-75	32
-26C50-50	32
-26C50A-50	32
-26C54-50	32
-26C55-50	32
-26C59-75	32
-26C60-75	32
-26C61-75	32
-26C61B-75	32
-26C61D-50	32

CODE CÓDIGO	Pág..
A-N-26C67-75	32
-26C68-75	32
-26C74-75	32
-26C76-50	32
-26C76A-50	32
-26C77-75	32
-26C84-75	33
-26C88-75	33
-26C99-50	33
-26C100-50	33
-26C101-50	33
-26C102-75	33
-26C103-50	33
-26C103A-75	33
-26C103D-50	33
-26C108-50	33
-26C108A-75	33
-26C109-50	33
-26P25-75	34
-26P25A-50	34
-26P26-50	34
-26P26B-75	34
-26P50-50	34
-26P50A-50	34
-26P59-75	34
-26P60-75	34
-26P61-75	34
-26P61B-75	34
-26P61D-50	34
-26P101-50	34
-26P102-75	34
-26P103-50	34
-26P103A-75	34
-26P103D-50	34
-26P108-50	34
-26P108A-75	34
-26P109-50	34
-26S22X-50	11
-26S36X-50	11
-26S63X-50	11
-26TF-50	37
-26TF-75	37
-31-50	42
-31-75	42
-40-50	41
-40-75	41
-44-50	41
-44-75	41
-51-00	42
-51-00-A	42
-53-50	42
-53-50-A	42
-53-75	42
-53-75-A	42
-54-50	43
-54-50-A	43
-54-50-B	43
-54-50-C	43
-54-75	43
-55-50	43
-55-50-A	43
-55-75	43
A-NI-10C18-50	47
-10C25A-50	47
-10C26-50	47
-10C50-50	47
-10C50A-50	47
-10C54-50	47
-10C55-50	47
-10C61D-50	47
-10C99-50	47
-10C100-50	47
-10C101-50	47
-10C103-50	47
-10C103D-50	47
-10C108-50	47
-10C109-50	47
-15C18-50	48
-15C25A-50	48
-15C26-50	48
-15C50-50	48
-15C50A-50	48
-15C54-50	48
-15C55-50	48
-15C61D-50	48
-15C99-50	48
-15C100-50	48
-15C101-50	48
-15C103-50	48
-15C103D-50	48
-15C108-50	48
-15C109-50	48

CODE CÓDIGO	Pág.
A-NI-20C18-50	45
-20C25A-50	45
-20C26-50	45
-20C50-50	45
-20C50A-50	45
-20C54-50	45
-20C55-50	45
-20C61D-50	45
-20C99-50	46
-20C100-50	46
-20C101-50	46
-20C103-50	46
-20C103D-50	46
-20C108-50	46
-20C108-50-A	46
-20C109-50	46

Interconexión *Interface* 7
Descripción *Description* 7,8
Características *Characteristics* 8
- Eléctricas *Electrical* 8
- Mecánicas *Mechanical* 8
- Ambientales *Environmental* 8

Conectores para cable semi-rígido *Connectors for semi-rigid cable*
- macho *plug*
  - recto soldar *straight solder* 9
  - 90° soldar *90° solder* 9
- hembra *jack*
  - recta soldar *straight solder* 10
- hembra panel *jack panel*
  - recta soldar (pletina cuadrada) *straight solder (square flange)* 10
  - recta soldar (montaje trasero) estanco *straight solder (rear mounting) waterproof* 11
  - recta soldar (montaje frontal) *straight solder (front mounting)* 11

Conectores para cable corrugado *Connectors for corrugated cable*
- macho recto *straight plug* 12
- hembra recta *straight jack* 13
- macho 90° *90° plug* 14

Conectores para cable flexible *Connectors for flexible cable*
- macho crimp *crimp type plug*
  - recto *straight* 15,16
  - 90° *90°* 17
- hembra crimp *crimp type jack*
  - recta *straight* 20,21
  - panel *panel*
    - pletina cuadrada *square flange* 23,24
    - montaje frontal *front mounting* 26,29
    - montaje frontal (estanco) *front mounting (waterproof)* 30,31
    - montaje trasero (estanco) *rear mounting (waterproof)* 32,33
- macho prensaestopas *clamp type plug*
  - recto *straight* 18
  - 90° *90°* 19
- hembra prensaestopas *clamp type jack*
  - recta *straight* 22
  - panel *panel*
    - pletina cuadrada *square flange* 25
    - montaje trasero (estanco) *rear mounting (waterproof)* 34

Conectores con contacto central soldable *Connectors with solder inner contact*
- macho *plug*
  - panel *receptacle*
    - pletina cuadrada *square flange* 35
- hembra *jack*
  - panel *receptacle*
    - pletina cuadrada *square flange* 35
    - montaje frontal *front mounting* 36
    - montaje frontal (estanco) *front mounting (waterproof)* 36
    - montaje trasero (estanco) *rear mounting (waterproof)* 37

Hembra panel (contacto central plano) *Jack receptacle (tab contact Stripline)*
- pletina cuadrada *square flange* 37

Conector panel (contacto central M-4) *Receptacle connector (inner contact M-4)*
- macho *plug*
  - panel *receptacle*
    - pletina cuadrada *square flange* 38
- hembra *jack*
  - panel *receptacle*
    - pletina cuadrada *square flange* 38
    - montaje frontal *front mounting* 39
    - montaje frontal (estanco) *front mounting (waterproof)* 39

ÍNDICE *INDEX*

Adaptadores *Adapters*
- prolongación *prolongation*
  - hembra-hembra *jack-jack* 40
  - macho-macho *plug-plug* 40
  - pasamuros hembra-hembra *jack-jack panel adapter* 41
- adaptador en T *T adapter*
  - hembra-hembra-hembra *jack-jack-jack* 41
  - hembra-macho-hembra *jack-plug-jack* 41
- adaptador a 90° *90° adapter* 42

Protectores *Protectives*
- tapón para hembra *cap for jack* 42

Terminaciones (cargas) *Terminations (loads)*
- macho *plug*
  - rango de frecuencia y potencia 50Ω *frequency and power range 50Ω*
    - 1.000 MHz 0.5 W 43
    - 2.5 GHz 1 W, 5 W, 10 W 43
    - 4 GHz 1 W, 5 W 43
- hembra *jack*
  - rango de frecuencia y potencia 50Ω *frequency and power range 50Ω*
    - 1.000 MHz 0.5 W 43
    - 4 GHz 1 W 43
- macho y hembra *plug and jack*
  - rango de frecuencia y potencia 75Ω *frequency and power range 75Ω*
    - 1.000 MHz 0.5 W 43

N INVERTIDO *N REVERSE*

Interconexión contacto central invertido *Reverse polarity interface* 44

Conectores parar cable flexible *Connectors for flexible cable*
- macho crimp *crimp type plug*
  - recto *straight* 45,46
- hembra crimp *crimp type jack*
  - recta *straight* 47
  - panel *receptacle*
    - montaje frontal *mounting* 48

DIMENSIONES INTERCONEXIÓN IEC 169-16

INTERFACE DIMENSIONS IEC 169-16

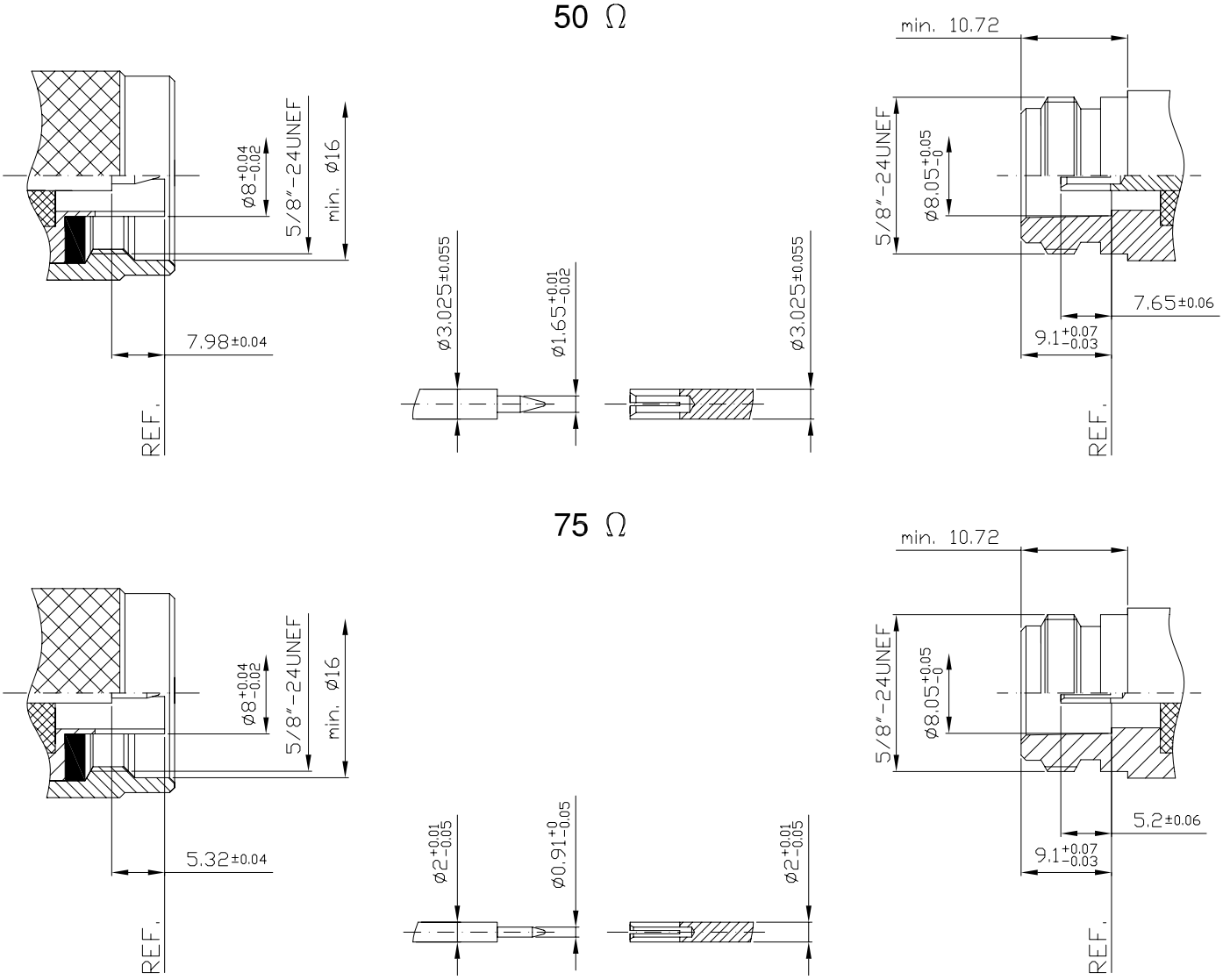

Los conectores de la serie N (Navy connector) son muy utilizados por su versatilidad, robustez y óptimos resultados en aplicaciones exigentes. Sus aplicaciones son múltiples en sistemas de telecomunicaciones, instrumentación..., con frecuencias efectivas de uso de 11 GHz (para la versión de 50 Ω) y 1.5 GHz (para la versión de 75 Ω). Se obtienen VSWR muy bajos, y una potencia de uso relativamente alta: 2 KW a 100 MHz, 800 W a 1 GHz y 200 W a 10 GHz.

Existen conectores para cables standard o especiales (flexibles, semirígidos, corrugados...). Distintas versiones de forma: recto, acodado, panel estanco,... Y en cuanto al montaje del cable, disponemos de versiones soldadas, prensa estopa, crimp, pinza...

N series (Navy connector) are connectors widely used, because of their versatility, strenght and excellent results. For this reason, N series connectors are particulary used in communication systems where high performance is required. Their applications are multiple: telecommunication systems, measurement instruments…Useful frequencies are over 11 GHz (for 50 Ω version) and over 1.5 GHz (for 75 Ω version). It obtains a very low VSWR and a high useful power: 2 KW to 100 MHz, 800 W to 1 GHz and 200 W to 10 GHz. There are connectors for standard and special cables (flexible, semirigid, corrugated,…) Different shaped versions: straight, 90º angle, waterproof panel,…About cable assembly, different types are available: soldered, clamp, crimp, pincer type,…

Determinadas versiones, sobretodo para aplicaciones de telefonía móvil, están especialmente estudiadas para obtener productos de intermodulación (PIM) muy bajos, mayores a 155 dBc (solicite conectores de baja intermodulación -BI-)

normativa: IEC 169-16.

Some versions, mainly for mobile telephone applications, are specially built to obtain very low intermodulation products (IMP), over 155 dBc (request low intermodulation connectors -BI-)

standard: IEC 169-16.

características eléctricas / *electrical characteristics*	
impedancia característica / *characteristic impedance*	50 Ω or 75 Ω
margen de frecuencia utilizable (recomendado) *useful frequency range (recommended)*	0...11 GHz (50 Ω) 0...1.5 GHz (75 Ω)
margen de frecuencia máxima *maximum frequency range*	0…18 GHz (50 Ω) 0…6 GHz (75 Ω)
VSWR (depende de la frecuencia, del cable utilizado para el test y del tipo de conector / *it depends on frequency, cable used for testing and kind of connector)*	para un conector recto / *for a straight connector:* < 1.05 (1.5 GHz) - < 1.10 (6 GHz) para un conector a 90º / *for a 90º connector:* < 1.08 (1.5 GHz) - <1.21 (6 GHz)
pérdida de inserción / *insertion loss*	<0.15 dB (10 GHz)
RF-leakage	>90 dB
PIM / *IMP*	> 155 dBc
resistencia aislante / *insulator resistance*	> 5 GΩ
resistencia contacto interior / *inner contact resistance*	< 1 mΩ
resistencia contacto exterior / *outer contact resistance*	< 0.3 mΩ
potencia máxima / *maximum power*	2 KW (0.1GHz) - 800 W (1 GHz) - 200 W (10 GHz)
voltaje de trabajo / *working voltage*	1400 Vrms
voltaje de pico / *peak voltage*	2500 Vrms

características mecánicas / *mechanical characteristics*	
durabilidad / *durability*	> 500 ciclos conexión / *> 500 matings*
par aplicable al racord / *coupling nut torque*	70...100 Nm
material aislante / *insulator material*	PTFE
material contactos interiores / *inner contacts material.*	macho / *male:* CuZn39Pb3 - hembra / *female:* CuBe2
material cuerpos exteriores /*outer bodies material*	CuZn39Pb3
juntas estanqueidad / *gaskets*	silicona / *silicone*
acabados / *finish plating*	cuerpos exter. no BI / *no BI outer bodies:* NI 5µ. contactos interiores no BI / *no BI inner contacts:* AU 1µ. piezas con contacto eléctrico serie BI / *BI serie parts with electrical contact:* Ag 5µ. otras piezas BI / *others BI parts:* Ni 5µ.

características ambientales / *environmental characteristics*	
margen de temperatura / *temperature range*	-65ºC....+165ºC
categoría climática IEC / *IEC climatic category*	55/155/21
choque térmico / *thermal shock*	MIL-STD-202/107-B
resistencia a la humedad / *moisture resistance*	MIL-STD-202/106-B
resistencia a la corrosión / *corrosion resistance*	MIL-STD-202/101-B
resistencia a la vibración / *vibration resistance*	MIL-STD-202/204-B

Conectores para cable semi-rígido

Connectors for semi-rigid cable

macho recto soldar

straight solder type plug

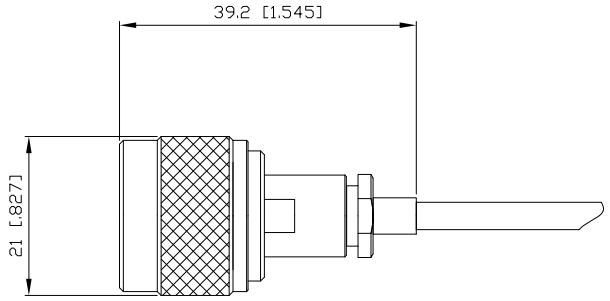

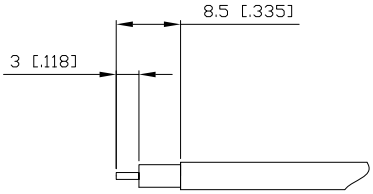

CABLE CABLE	*INSTRUC.* INSTRUC.	Ω	*ALFA`R CODE* CÓDIGO ALFA`R	
UT-86 (RG-405)	INS 16	50	A-N-10S22X-50	
UT-141 (RG-402)			A-N-10S36X-50	
UT-250 (RG-401)			A-N-10S63X-50	

macho 90° soldar

90° solder type plug

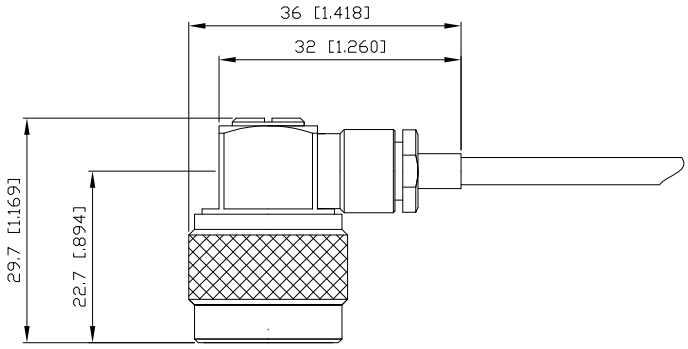

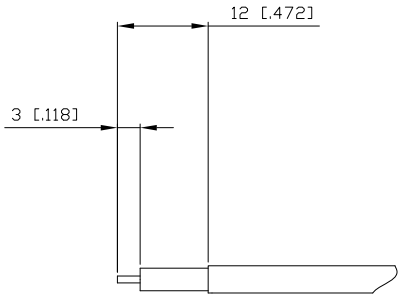

CABLE CABLE	*INSTRUC.* INSTRUC.	Ω	*ALFA`R CODE* CÓDIGO ALFA`R	
UT-86 (RG-405)	INS 17	50	A-N-11S22X-50	
UT-141 (RG-402)			A-N-11S36X-50	
UT-250 (RG-401)			A-N-11S63X-50	

hembra recta soldar

straight solder type jack

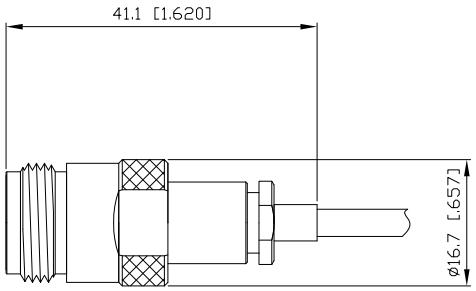

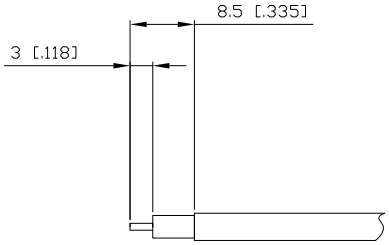

CABLE CABLE	*INSTRUC.* INSTRUC.	Ω	*ALFA`R CODE* CÓDIGO ALFA`R	
UT-86 (RG-405)	INS 16	50	A-N-20S22X-50	
UT-141 (RG-402)			A-N-20S36X-50	
UT-250 (RG-401)			A-N-20S63X-50	

hembra recta panel soldar (pletina cuadrada) estanco con panel

straight solder type jack panel (square flange) waterproof with panel

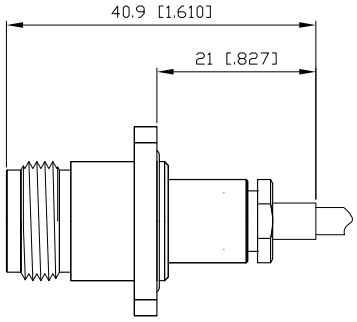

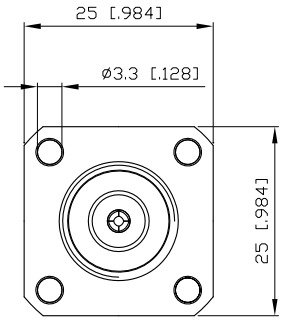

waterproof with panel

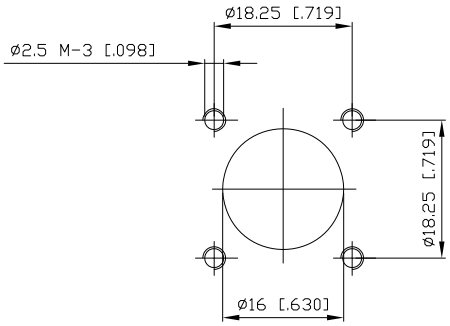

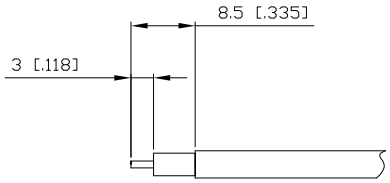

CABLE CABLE	*INSTRUC.* INSTRUC.	Ω	*ALFA`R CODE* CÓDIGO ALFA`R	
UT-86 (RG-405)	INS 16	50	A-N-22S22X-50	
UT-141 (RG-402)			A-N-22S36X-50	
UT-250 (RG-401)			A-N-22S63X-50	

ALFA`R

hembra recta panel soldar
(montaje trasero)
estanco

straight solder type jack panel
(rear mounting bulkhead)
waterproof

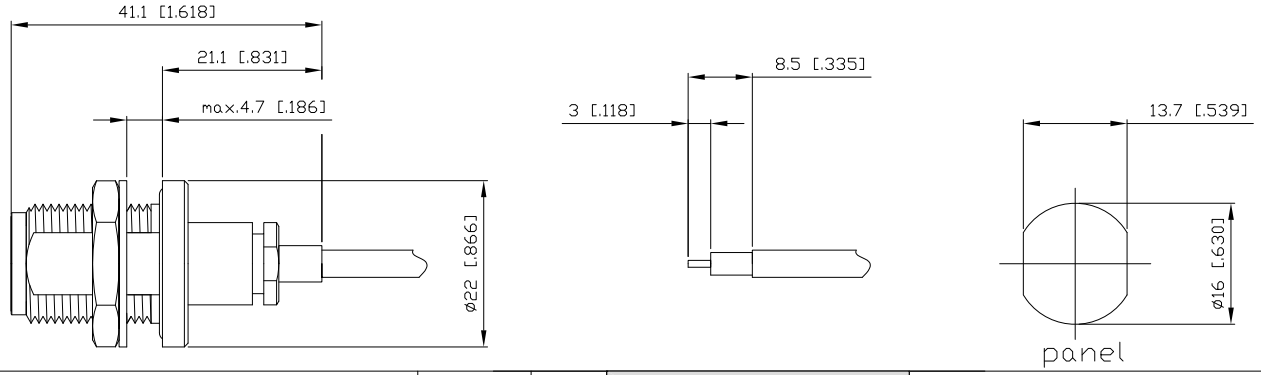

CABLE CABLE	*INSTRUC.* INSTRUC.	Ω	*ALFA`R CODE* CÓDIGO ALFA`R	
UT-86 (RG-405)	INS 16	50	A-N-26S22X-50	
UT-141 (RG-402)			A-N-26S36X-50	
UT-250 (RG-401)			A-N-26S63X-50	

hembra recta panel soldar
(montaje frontal)

straight solder type jack panel
(front mounting)

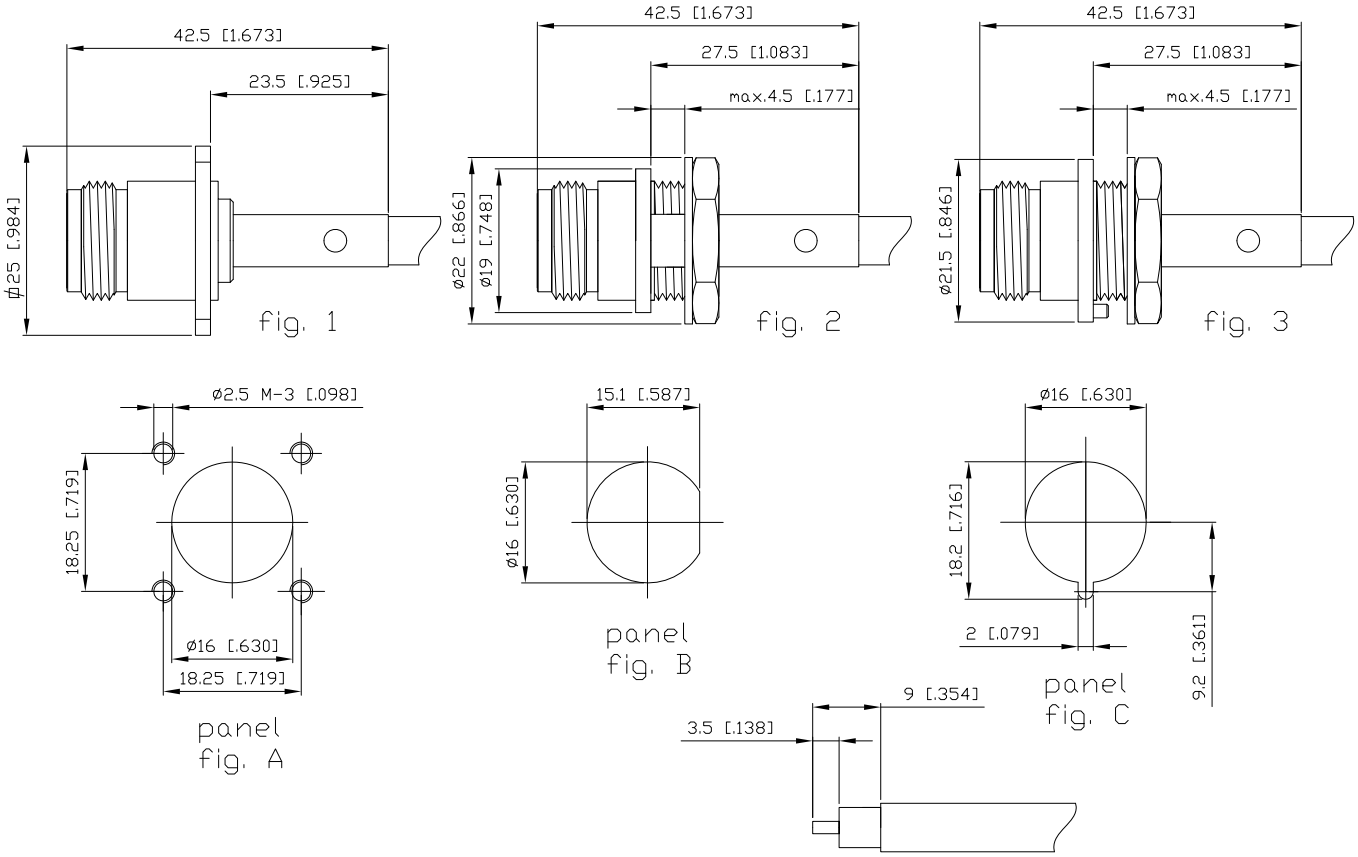

CABLE CABLE	*NOTE* NOTA		*ALFA`R CODE* CÓDIGO ALFA`R	*FIG.* FIG.		*INSTRUC.* INSTRUC.	Ω
UT-250 (RG-401)	pletina cuadrada	*square flange*	A-N-22S63X-50-A	1	A	INS 18	50
	plano antigiro	*non-moving plane bulkhead*	A-N-25S63X-50	2	B		
	pivote antigiro	*non-moving pivot bulkhead*	A-N-25S63X-50-F	3	C		

Conectores para cable corrugado
macho recto

Connectors for corrugated cable
straight plug

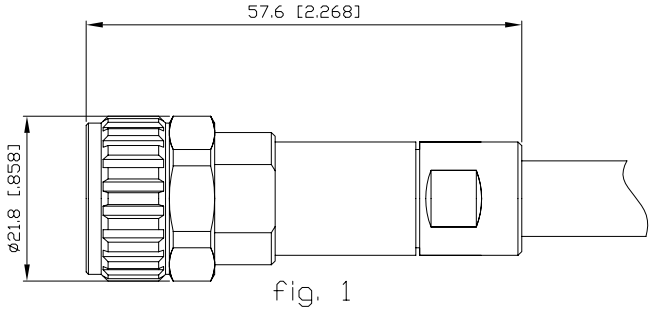

fig. 1

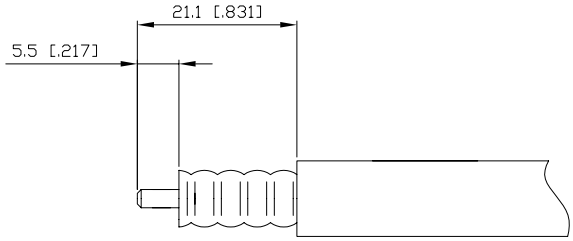

fig. A

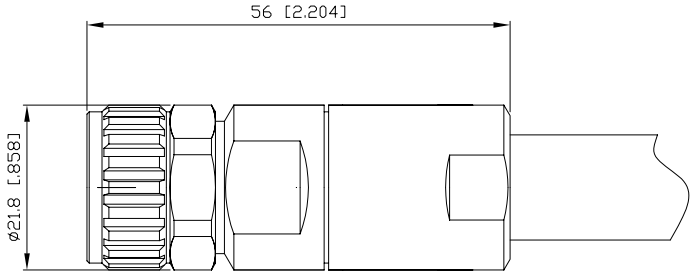

fig. 2

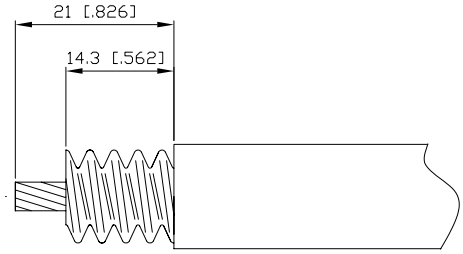

fig. B

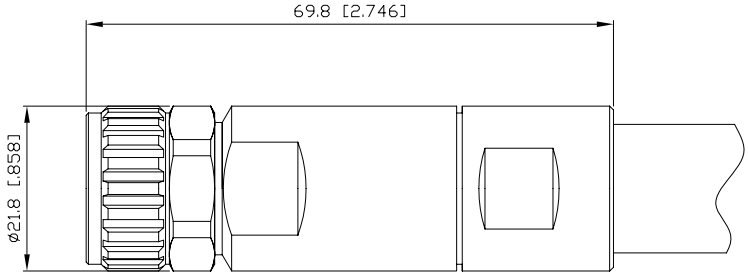

fig. 3

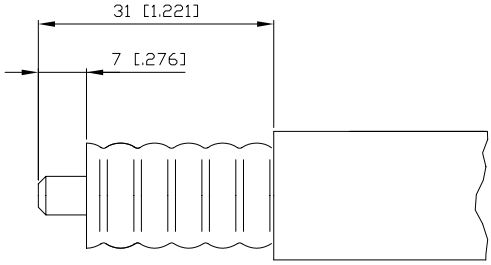

fig. C

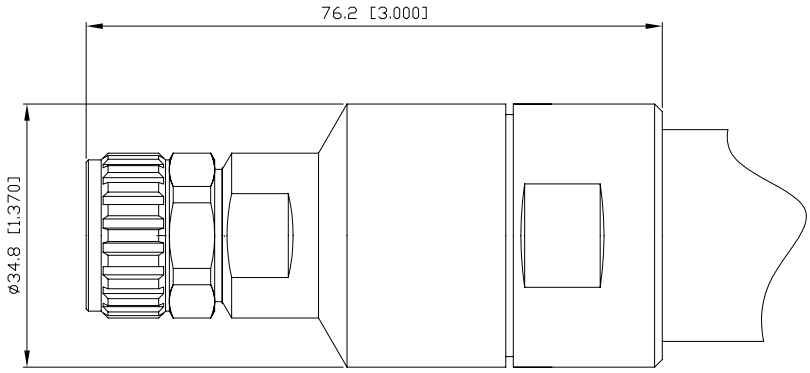

fig. 4

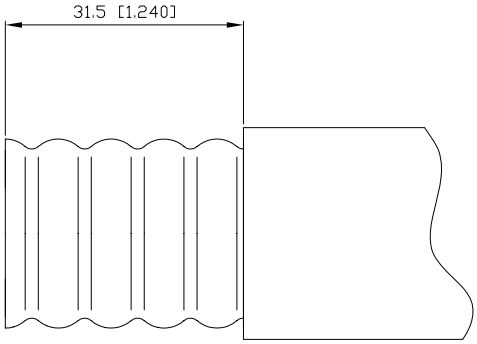

fig. D

CABLE CABLE	*INSTRUC.* INSTRUC.	Ω	*ALFA`R CODE* CÓDIGO ALFA`R	*FIG.* FIG.		
CF 1/4" Cu2Y	INS 19	50	A-N-10P100Z-50	1	A	
1/2" SUPERFLEX	INS 20		A-N-10P139Z-50	2	B	
CF 1/2" Cu2Y	INS 19		A-N-10P160Z-50	3	C	
CF 7/8" Cu2Y	INS 34		A-N-10P280Z-50	4	D	

ALFA`R

hembra recto

straight jack

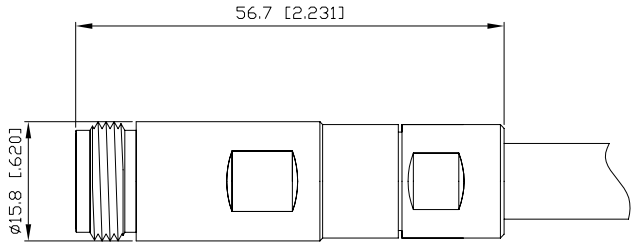

fig. 1

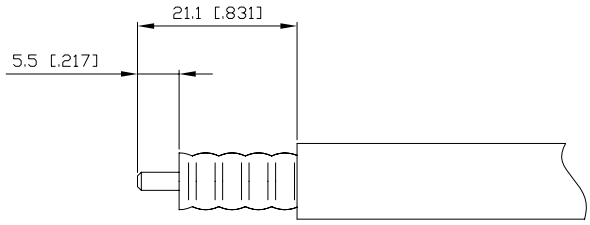

fig. A

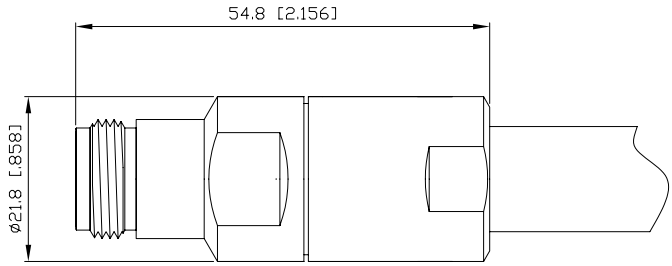

fig. 2

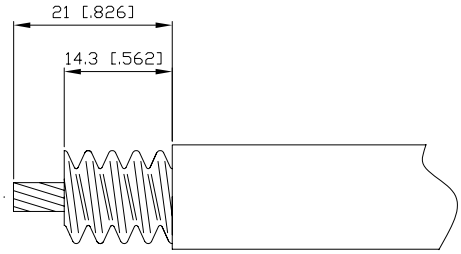

fig. B

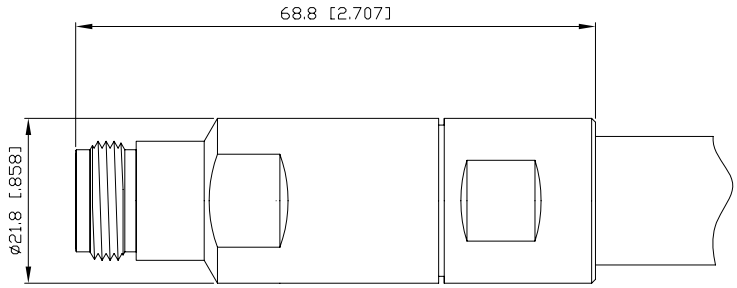

fig. 3

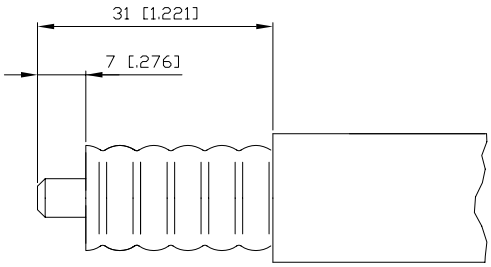

fig. C

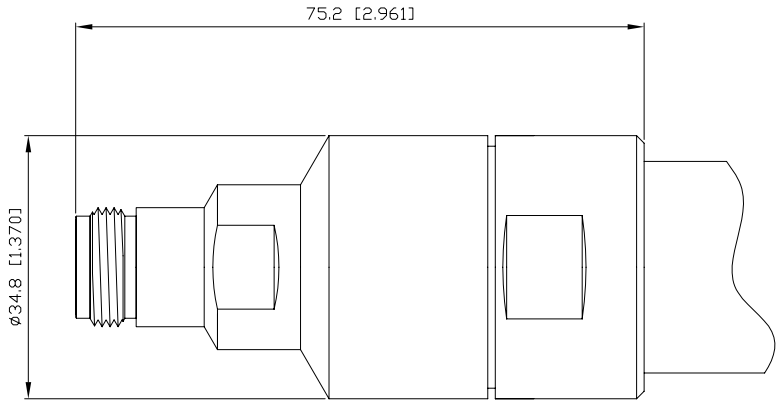

fig. 4

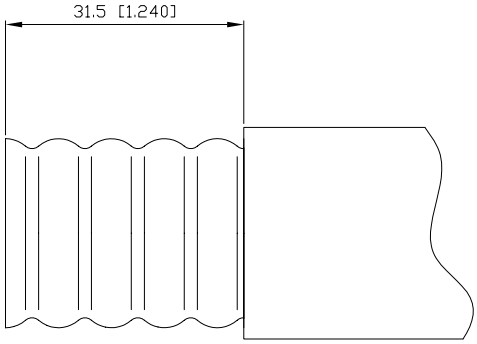

fig. D

CABLE CABLE	*INSTRUC.* INSTRUC.	Ω	*ALFA`R CODE* CÓDIGO ALFA`R	*FIG.* FIG.		
CF 1/4" Cu2Y	INS 19	50	A-N-20P100Z-50	1	A	
1/2" SUPERFLEX	INS 20		A-N-20P139Z-50	2	B	
CF 1/2" Cu2Y	INS 19		A-N-20P160Z-50	3	C	
CF 7/8" Cu2Y	INS 34		A-N-20P280Z-50	4	D	

macho 90°

90° plug

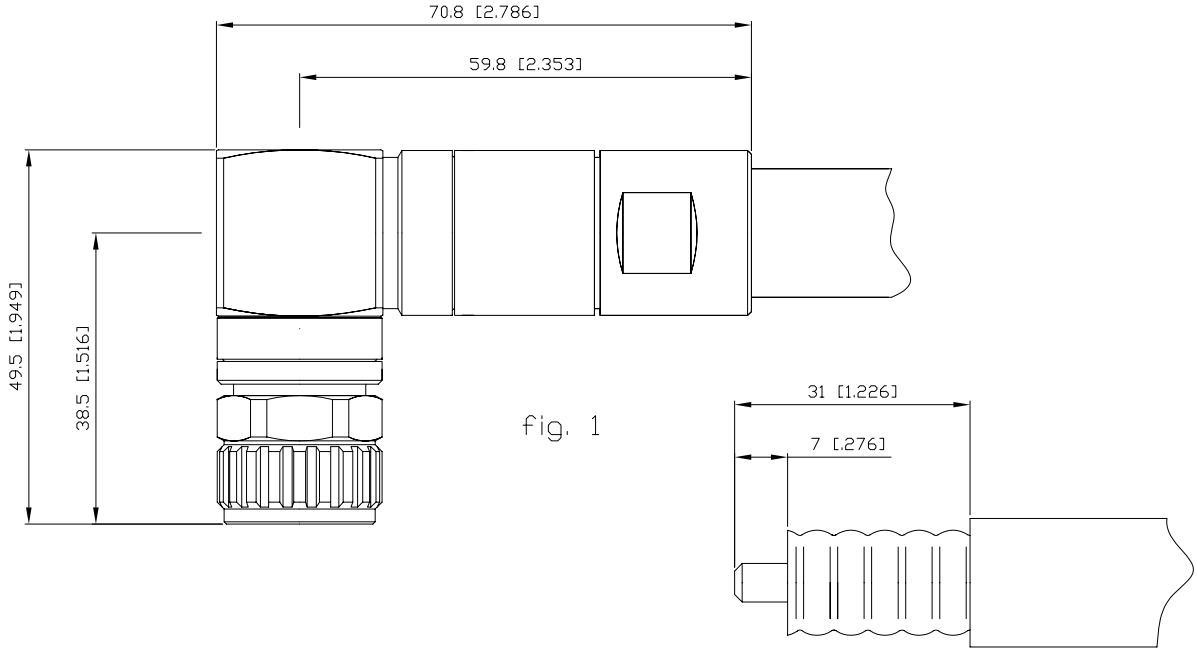

fig. 1

fig. A

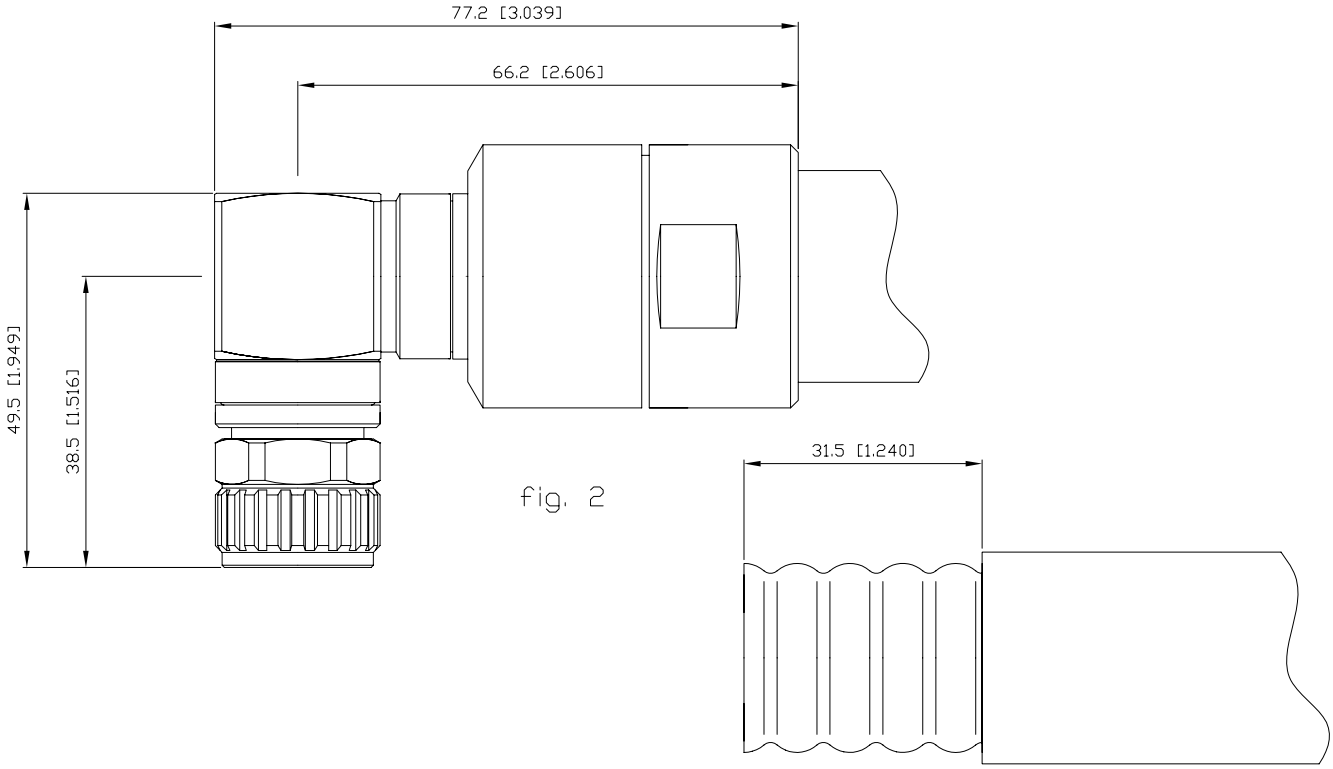

fig. 2

fig. B

CABLE CABLE	*INSTRUC.* INSTRUC.	Ω	*ALFA`R CODE* CÓDIGO ALFA`R	*FIG.* FIG.		
CF 1/2" Cu2Y	INS 19	50	A-N-11P160Z-50	1	A	
CF 7/8" Cu2Y	INS 34		A-N-11P280Z-50	2	B	

ALFA`R

Conectores para cable flexible
macho recto crimp

Connectors for flexible cable
straight crimp type plug

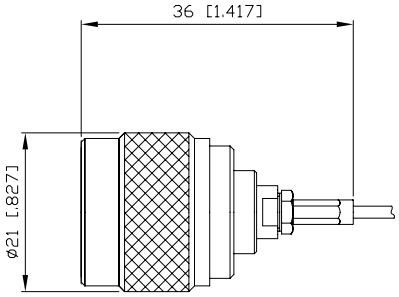

fig.1

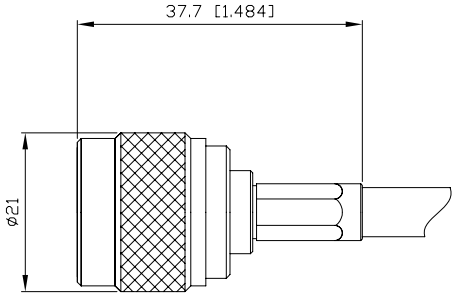

fig.2

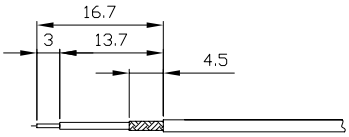

fig.A

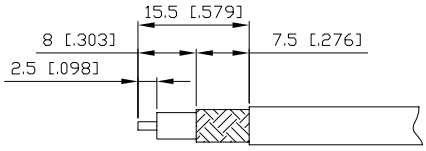

fig.B

CABLE CABLE	*INSTRUC.* INSTRUC.	Ω	*ALFA`R CODE* CÓDIGO ALFA`R	*FIG.* FIG.		*CRIMPING TOOL* HERRAMIENTA CRIMP
RG-178; RG-196	INS 8	50	A-N-10C18-50	1	A	A-EIN-C-1-C62
RG-316			A-N-10C25A-50			A-EIN-C-1-642
RG-174; RG-188			A-N-10C26-50			
RG-58; RG-141; RG-303	INS 9		A-N-10C50-50	2	B	A-EIN-C-1-342
RG-142; RG-400			A-N-10C50A-50			
RG-223			A-N-10C54-50			
S 04272 B			A-N-10C55-50			
LMR-240			A-N-10C61D-50			
5D-FB			A-N-10C76-50			A-EIN-C-1-52
LMR-300			A-N-10C76A-50			

TX-20	INS 8	75	A-N-10C16-75	1	A	A-EIN-C-1-C62
RG-179			A-N-10C25-75			A-EIN-C-1-642
RG-187			A-N-10C26B-75			
FLEX-2			A-N-10C27-75			
FLEX-4	INS 9		A-N-10C45-75	2	B	A-EIN-C-1-932
FLEX-5			A-N-10C47-75			A-EIN-C-1-342
ST-214			A-N-10C59-75			
FLEX-6			A-N-10C60-75			
RG-59			A-N-10C61-75			
0.8-0.7; 1505A; 9889; VK-6			A-N-10C61B-75			
TF-2240			A-N-10C67-75			
RG-6 CATV			A-N-10C68-75			A-EIN-C-1-52
FLEX-7			A-N-10C74-75			
VK49			A-N-10C77-75			

macho crimp recto

straight crimp type plug

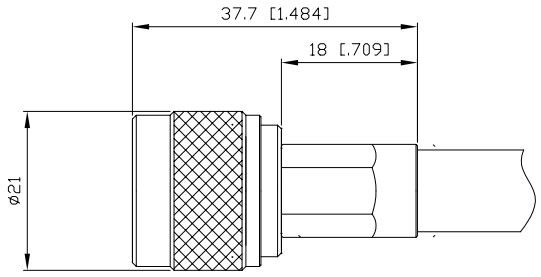

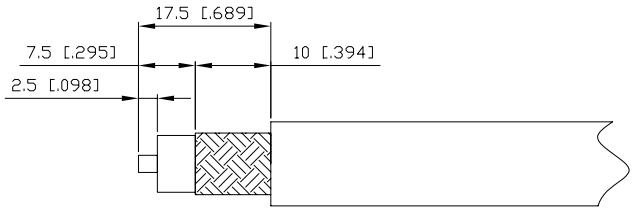

CABLE CABLE	*INSTRUC.* INSTRUC.	Ω	*ALFA`R CODE* CÓDIGO ALFA`R	*CRIMPING TOOL* HERRAMIENTA CRIMP
RG-393	INS 9	50	A-N-10C99-50	A-EIN-C-2-D2
ECO FLEX-10			A-N-10C100-50	
RG-8			A-N-10C101-50	
RG-213; RG-165			A-N-10C103-50	
LMR-400	INS 37		A-N-10C103D-50	
RG-214	INS 9		A-N-10C108-50	
RG-225			A-N-10C109-50	

RG-6 MIL	INS 9	75	A-N-10C84-75	A-EIN-C-2-D1
1.0/6.6/8.8			A-N-10C88-75	
14/8 CATV			A-N-10C102-75	
RG-11			A-N-10C103A-75	
RG-216			A-N-10C108A-75	

macho crimp recto
estanco

straight crimp type plug
waterproof

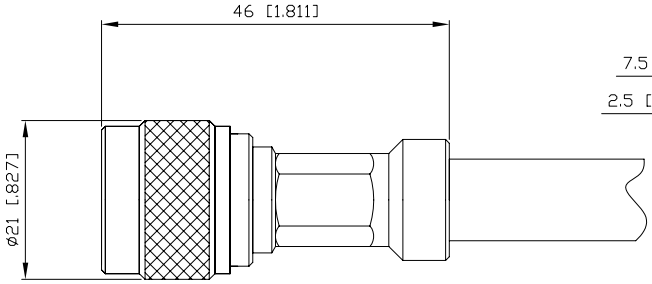

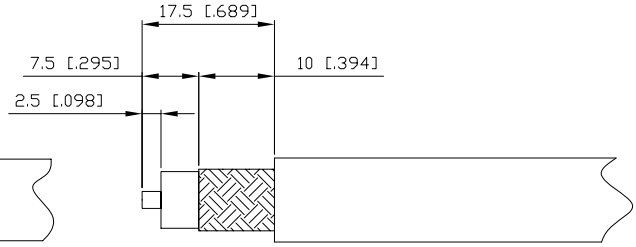

CABLE CABLE	*INSTRUC.* INSTRUC.	Ω	*ALFA`R CODE* CÓDIGO ALFA`R	*CRIMPING TOOL* HERRAMIENTA CRIMP
RG-213; RG-165	INS 36	50	A-N-10C103-50-A	A-EIN-C-2-D2
LMR400	INS 37		A-N-10C103D-50-A	
RG-214	INS 36		A-N-10C108-50-A	

RG-11MIL	INS 36	75	A-N-10C103A-75-A	A-EIN-C-2-D1
RG-216			A-N-10C108A-75-A	

macho 90° crimp

90° crimp type plug

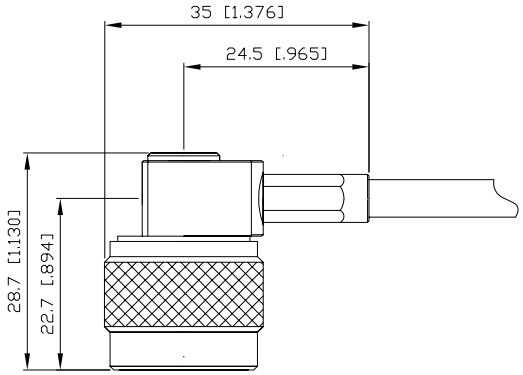

fig. 1

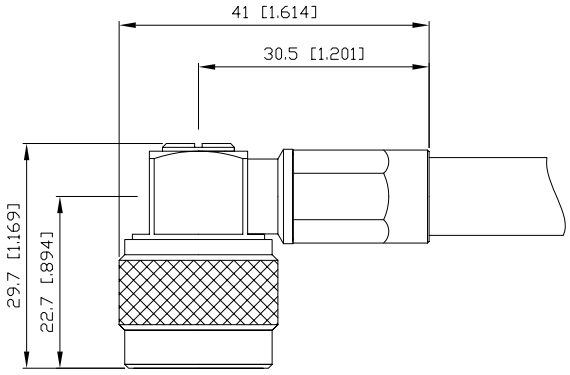

fig. 2

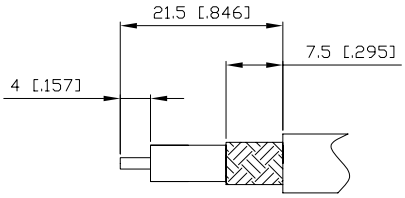

fig. A

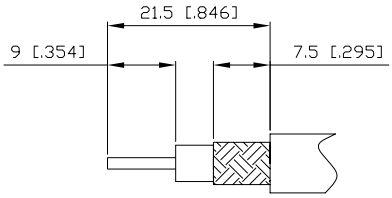

fig. B

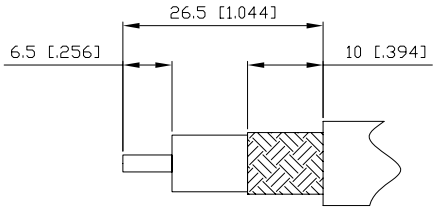

fig. C

CABLE CABLE	*INSTRUC.* INSTRUC.	Ω	*ALFA`R CODE* CÓDIGO ALFA`R	*FIG.* FIG.		*CRIMPING TOOL* HERRAMIENTA CRIMP
RG-58; RG-141; RG-303	INS 11	50	A-N-11C50-50	1	A	A-EIN-C-1-342
RG-142; RG-400			A-N-11C50A-50		B	
RG-223			A-N-11C54-50			
S 04272 B			A-N-11C55-50			
LMR-240			A-N-11C61D-50			
5D-FB			A-N-11C76-50			
LMR-300			A-N-11C76A-50			
RG-393			A-N-11C99-50	2	C	A-EIN-C-2-D2
ECO FLEX-10			A-N-11C100-50			
RG-8			A-N-11C101-50			
RG-213			A-N-11C103-50			
LMR-400; RG-165			A-N-11C103D-50			
RG-214			A-N-11C108-50			
RG-225			A-N-11C109-50			

macho recto prensaestopas

straight clamp type plug

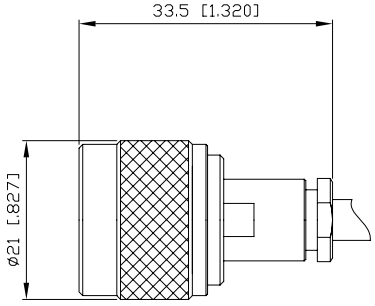

fig. 1

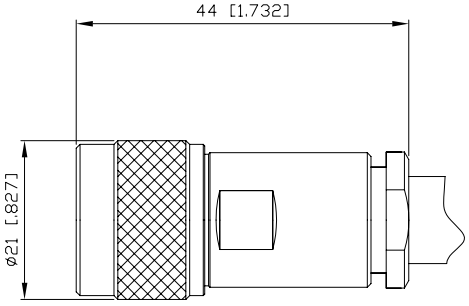

fig. 2

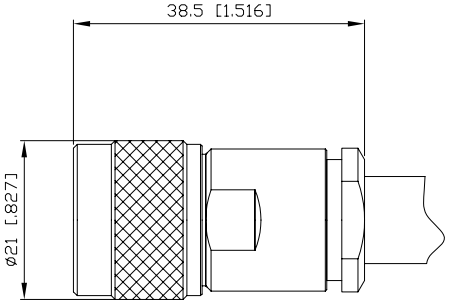

fig. 3

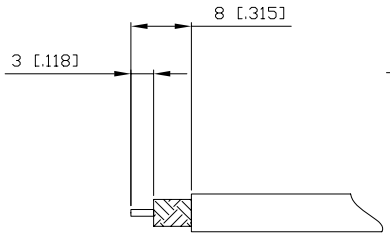

fig. A

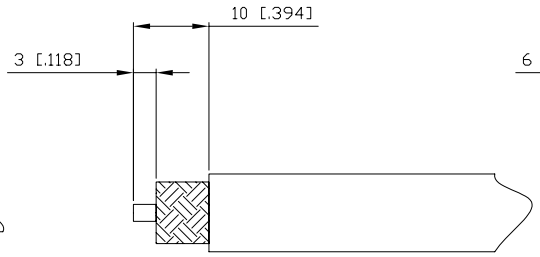

fig. B

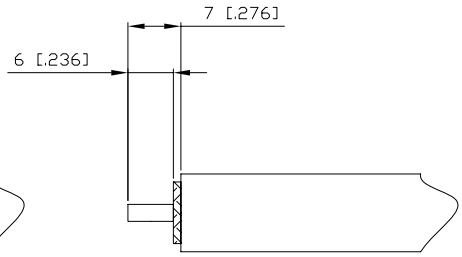

fig. C

CABLE CABLE	*INSTRUC.* INSTRUC.	Ω	*ALFA`R CODE* CÓDIGO ALFA`R	*FIG.* FIG.		
RG-316	INS 21	50	A-N-10P25A-50	1	A	
RG-174; RG-188			A-N-10P26-50			
RG-58; RG-141; RG-303			A-N-10P50-50			
RG-142; RG-400			A-N-10P50A-50			
LMR-240			A-N-10P61D-50			
RG-8			A-N-10P101-50	2	B	
RG-213			A-N-10P103-50			
	INS 35		A-N-10P103-50-A	3	C	
LMR-400	INS 37		A-N-10P103D-50	2	B	
RG-214	INS 21		A-N-10P108-50			
RG-225			A-N-10P109-50			

RG-179	INS 21	75	A-N-10P25-75	1	A	
RG-187			A-N-10P26B-75			
ST-214			A-N-10P59-75			
FLEX-6			A-N-10P60-75			
RG-59			A-N-10P61-75			
Three Shield ø6.1			A-N-10P61B-75			
14/8 CATV			A-N-10P102-75	2	B	
RG-11			A-N-10P103A-75			
RG-216			A-N-10P108A-75			

ALFA'R

macho 90° prensaestopas

90° clamp type plug

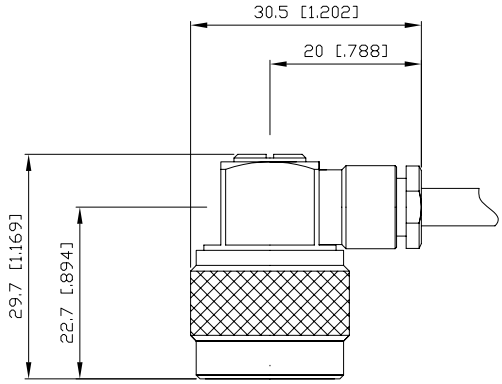

fig. 1

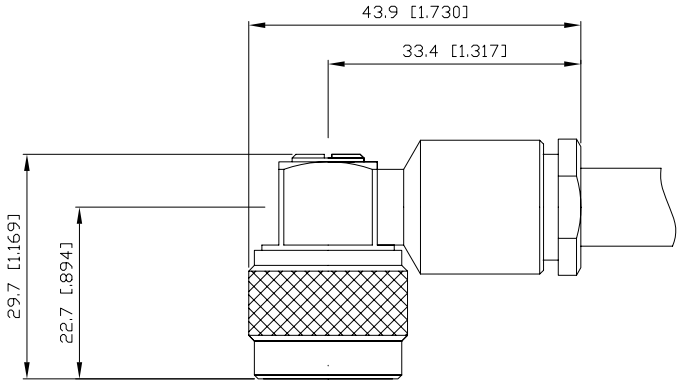

fig. 2

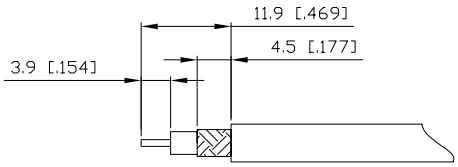

fig. A

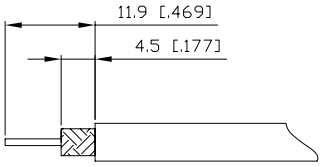

fig. B

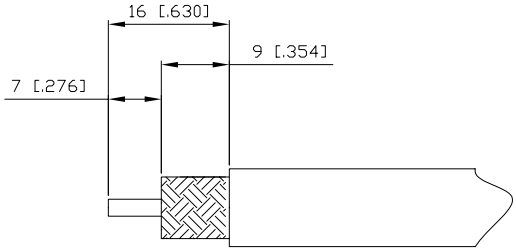

fig. C

CABLE CABLE	*INSTRUC.* INSTRUC.	Ω	*ALFA`R CODE* CÓDIGO ALFA`R	*FIG.* FIG.		
RG-316	INS 14	50	A-N-11P25A-50	1	A	
RG-174; RG-188			A-N-11P26-50			
RG-58; RG-141; RG-303			A-N-11P50-50			
RG-142; RG-400			A-N-11P50A-50			
LMR-240			A-N-11P61D-50		B	
RG-8			A-N-11P101-50	2	C	
RG-213			A-N-11P103-50			
LMR-400; RG-165			A-N-11P103D-50			
RG-214			A-N-11P108-50			
RG-225			A-N-11P109-50			

hembra recta crimp

straight crimp type jack

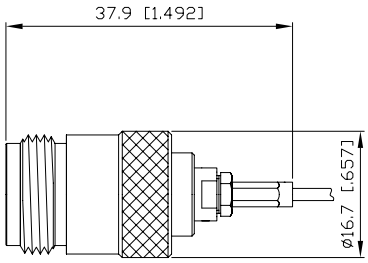

fig.1

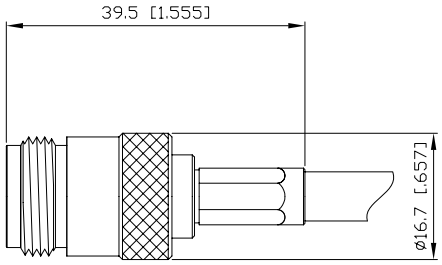

fig.2

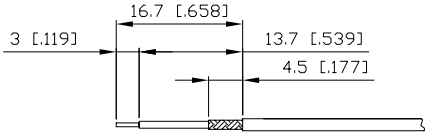

fig.A

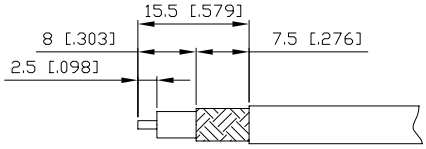

fig.B

CABLE CABLE	*INSTRUC.* INSTRUC.	Ω	*ALFA`R CODE* CÓDIGO ALFA`R	*FIG.* FIG.		*CRIMPING TOOL* HERRAMIENTA CRIMP
RG-178; RG-196	INS 8	50	A-N-20C18-50	1	A	A-EIN-C-1-C62
RG-316			A-N-20C25A-50			A-EIN-C-1-642
RG-174; RG-188			A-N-20C26-50			
RG-58; RG-141; RG-303	INS 9		A-N-20C50-50	2	B	A-EIN-C-1-342
RG-142; RG-400			A-N-20C50A-50			
RG-223			A-N-20C54-50			
S 04272-B			A-N-20C55-50			
LMR-240			A-N-20C61D-50			
5D-FB			A-N-20C76-50			A-EIN-C-1-52
LMR-300			A-N-20C76A-50			

TX-20	INS 8	75	A-N-20C16-75	1	A	A-EIN-C-1-C62
RG-179			A-N-20C25-75			A-EIN-C-1-642
RG-187			A-N-20C26B-75			
FLEX-2			A-N-20C27-75			
FLEX-4	INS 9		A-N-20C45-75	2	B	A-EIN-C-1-932
FLEX-5			A-N-20C47-75			A-EIN-C-1-342
ST-214			A-N-20C59-75			
FLEX-6			A-N-20C60-75			
RG-59			A-N-20C61-75			
0.8-0.7; 1505A; 9889; VK-6			A-N-20C61B-75			
TF-2240			A-N-20C67-75			A-EIN-C-1-52
RG-6 CATV			A-N-20C68-75			
FLEX-7			A-N-20C74-75			
VK-49			A-N-20C77-75			

ALFA'R

hembra recta crimp

straight crimp type jack

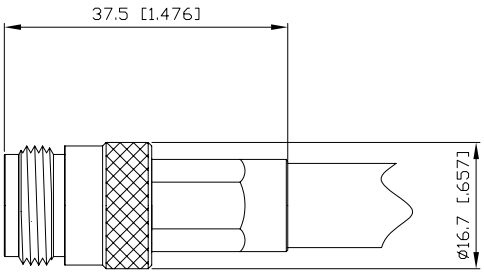

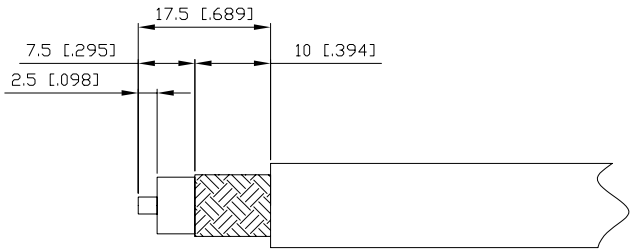

CABLE CABLE	*INSTRUC.* INSTRUC.	Ω	*ALFA`R CODE* CÓDIGO ALFA`R	*CRIMPING TOOL* HERRAMIENTA CRIMP
RG-393	INS 9	50	A-N-20C99-50	A-EIN-C-2-D2
ECO FLEX-10			A-N-20C100-50	
RG-8			A-N-20C101-50	
RG-213			A-N-20C103-50	
LMR-400; RG-165			A-N-20C103D-50	
RG-214			A-N-20C108-50	
RG-225			A-N-20C109-50	

RG-6 MIL	INS 9	75	A-N-20C84-75	A-EIN-C-2-D2
14/8 CATV			A-N-20C102-75	
RG-11			A-N-20C103A-75	
RG-216			A-N-20C108A-75	

macho crimp recto estanco

straight crimp type plug waterproof

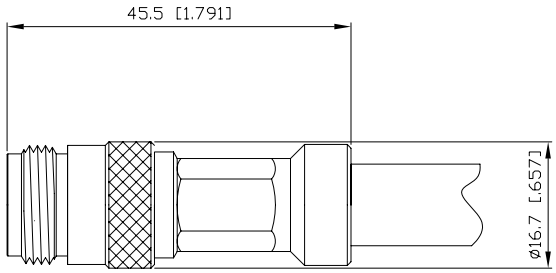

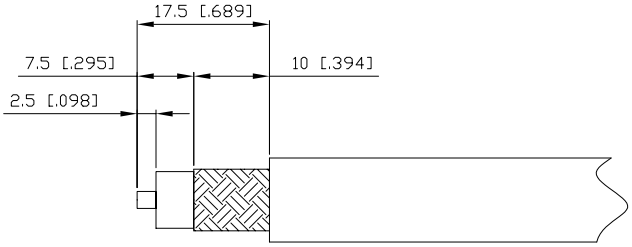

CABLE CABLE	*INSTRUC.* INSTRUC.	Ω	*ALFA`R CODE* CÓDIGO ALFA`R	*CRIMPING TOOL* HERRAMIENTA CRIMP
RG-213; RG-165	INS 36	50	A-N-20C103-50-A	A-EIN-C-2-D2
LMR400	INS 37		A-N-20C103D-50-A	
RG-214	INS 36		A-N-20C108-50-A	

RG-11MIL	INS 36	75	A-N-20C103A-75-A	A-EIN-C-2-D1
RG-216			A-N-20C108A-75-A	

hembra recta prensaestopas

straight clamp type jack

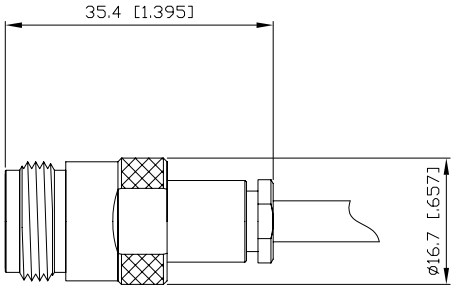

fig. 1

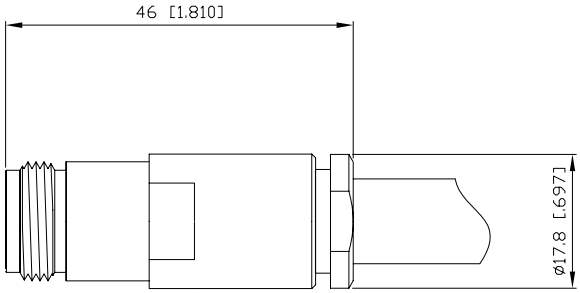

fig. 2

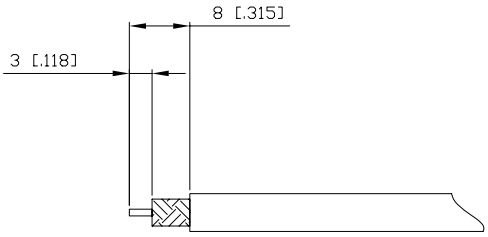

fig. A

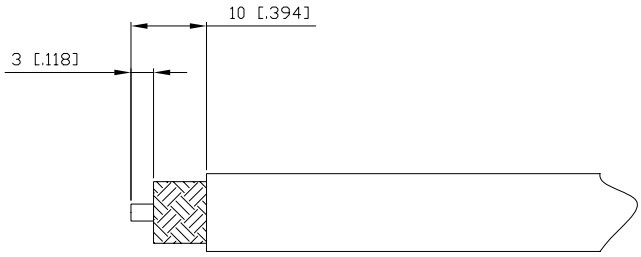

fig. B

CABLE CABLE	*INSTRUC.* INSTRUC.	Ω	*ALFA`R CODE* CÓDIGO ALFA`R	*FIG.* FIG.		
RG-316	INS 21	50	A-N-20P25A-50	1	A	
RG-174; RG-188			A-N-20P26-50			
RG-58; RG-141; RG-303			A-N-20P50-50			
RG-142; RG-400			A-N-20P50A-50			
LMR-240			A-N-20P61D-50			
RG-8			A-N-20P101-50	2	B	
RG-213			A-N-20P103-50			
LMR-400; RG-165			A-N-20P103D-50			
RG-214			A-N-20P108-50			
RG-225			A-N-20P109-50			

RG-179	INS 21	75	A-N-20P25-75	1	A	
RG-187			A-N-20P26B-75			
ST-214			A-N-20P59-75			
FLEX-6			A-N-20P60-75			
RG-59			A-N-20P61-75			
0.8-0.7; 1505A; 9889; VK-6			A-N-20P61B-75			
14/8 CATV			A-N-20P102-75	2	B	
RG-11			A-N-20P103A-75			
RG-216			A-N-20P108A-75			

hembra recta panel crimp
(pletina cuadrada)

straight crimp type jack panel
(square flange)

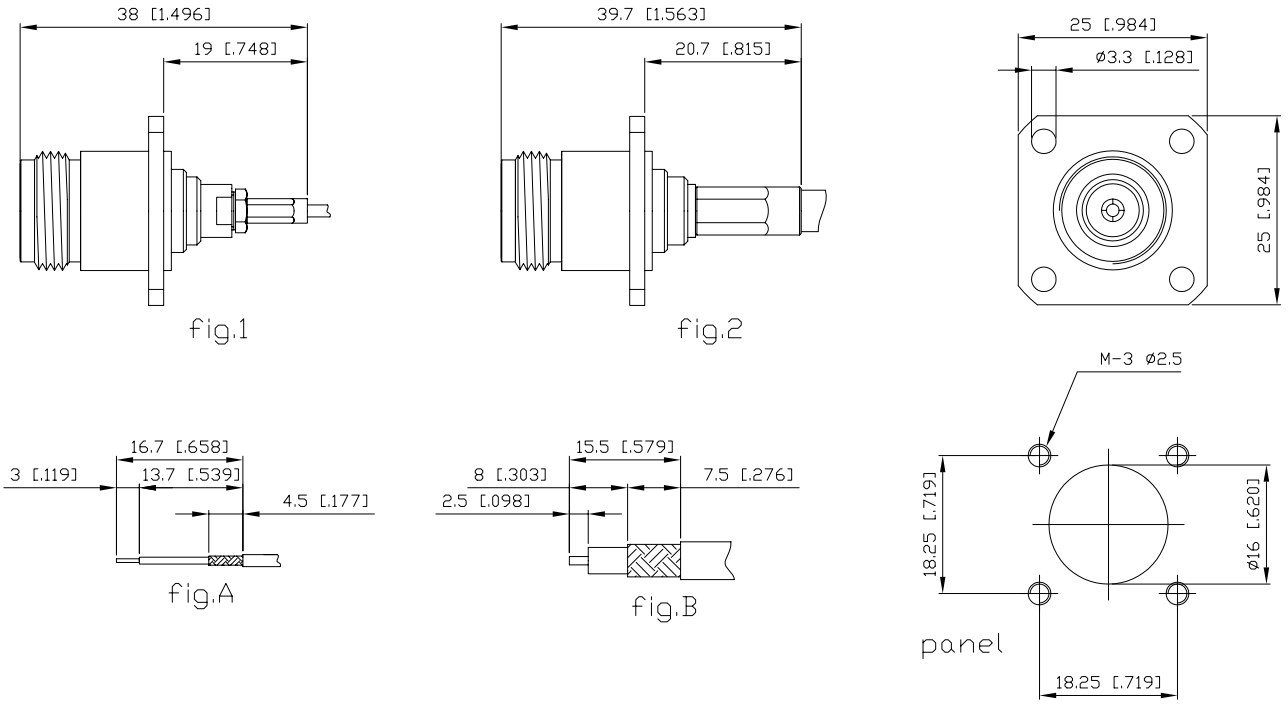

CABLE CABLE	*INSTRUC.* INSTRUC.	Ω	*ALFA`R CODE* CÓDIGO ALFA`R	*FIG.* FIG.		*CRIMPING TOOL* HERRAMIENTA CRIMP
RG-178; RG-196	INS 8	50	A-N-22C18-50	1	A	A-EIN-C-1-C62
RG-316			A-N-22C25A-50			A-EIN-C-1-642
RG-174; RG-188			A-N-22C26-50			
RG-58; RG-141; RG-303	INS 9		A-N-22C50-50	2	B	A-EIN-C-1-342
RG-142; RG-400			A-N-22C50A-50			
RG-223			A-N-22C54-50			
S 04272 B			A-N-22C55-50			
LMR-240			A-N-22C61D-50			

TX-20	INS 8	75	A-N-22C16-75	1	A	A-EIN-C-1-C62
RG-179			A-N-22C25-75			A-EIN-C-1-642
RG-187			A-N-22C26B-75			
FLEX-2			A-N-22C27-75			
FLEX-3	INS 9		A-N-22C35-75	2	B	A-EIN-C-1-932
FLEX-4			A-N-22C45-75			
FLEX-5			A-N-22C47-75			
ST-214			A-N-22C59-75			
FLEX-6			A-N-22C60-75			A-EIN-C-1-342
RG-59			A-N-22C61-75			
0.8-0.7; 1505A; 9889; VK-6			A-N-22C61B-75			
TF-2240			A-N-22C67-75			A-EIN-C-1-52
RG-6 CATV			A-N-22C68-75			
FLEX-7			A-N-22C74-75			
VK-49			A-N-22C77-75			

hembra recta panel crimp
(pletina cuadrada)

straight crimp type jack panel
(square flange)

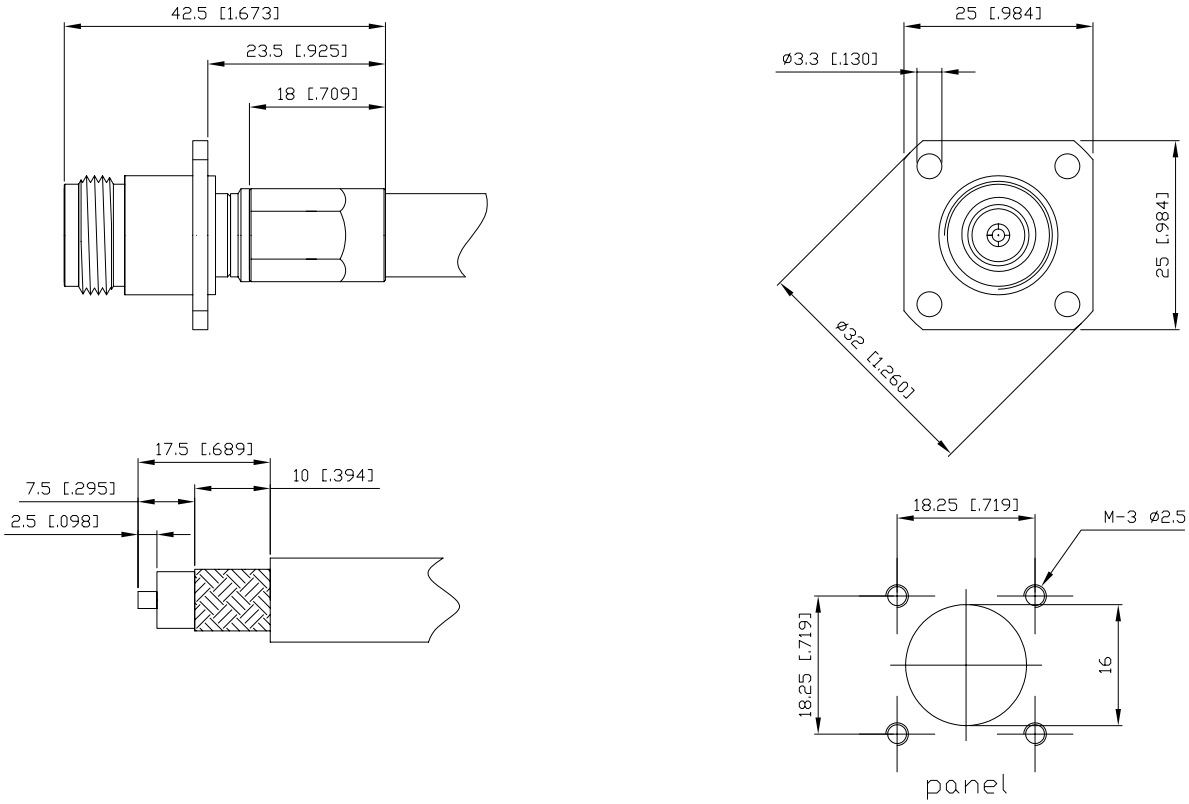

CABLE CABLE	*INSTRUC.* INSTRUC.	Ω	*ALFA`R CODE* CÓDIGO ALFA`R	*CRIMPING TOOL* HERRAMIENTA CRIMP
RG-393	INS 9	50	A-N-22C99-50	A-EIN-C-2-D2
ECO FLEX-10			A-N-22C100-50	
RG-8			A-N-22C101-50	
RG-213			A-N-22C103-50	
LMR-400; RG-165			A-N-22C103D-50	
RG-214			A-N-22C108-50	
RG-225			A-N-22C109-50	

RG-6 MIL	INS 9	75	A-N-22C84-75	A-EIN-C-2-D2
1.0/6.6/8.8			A-N-22C88-75	
14/8 CATV			A-N-22C102-75	
RG-11			A-N-22C103A-75	
RG-216			A-N-22C108A-75	

ALFA'R

hembra recta panel prensaestopas (pletina cuadrada) estanco

straight clamp type jack panel (square flange) waterproof

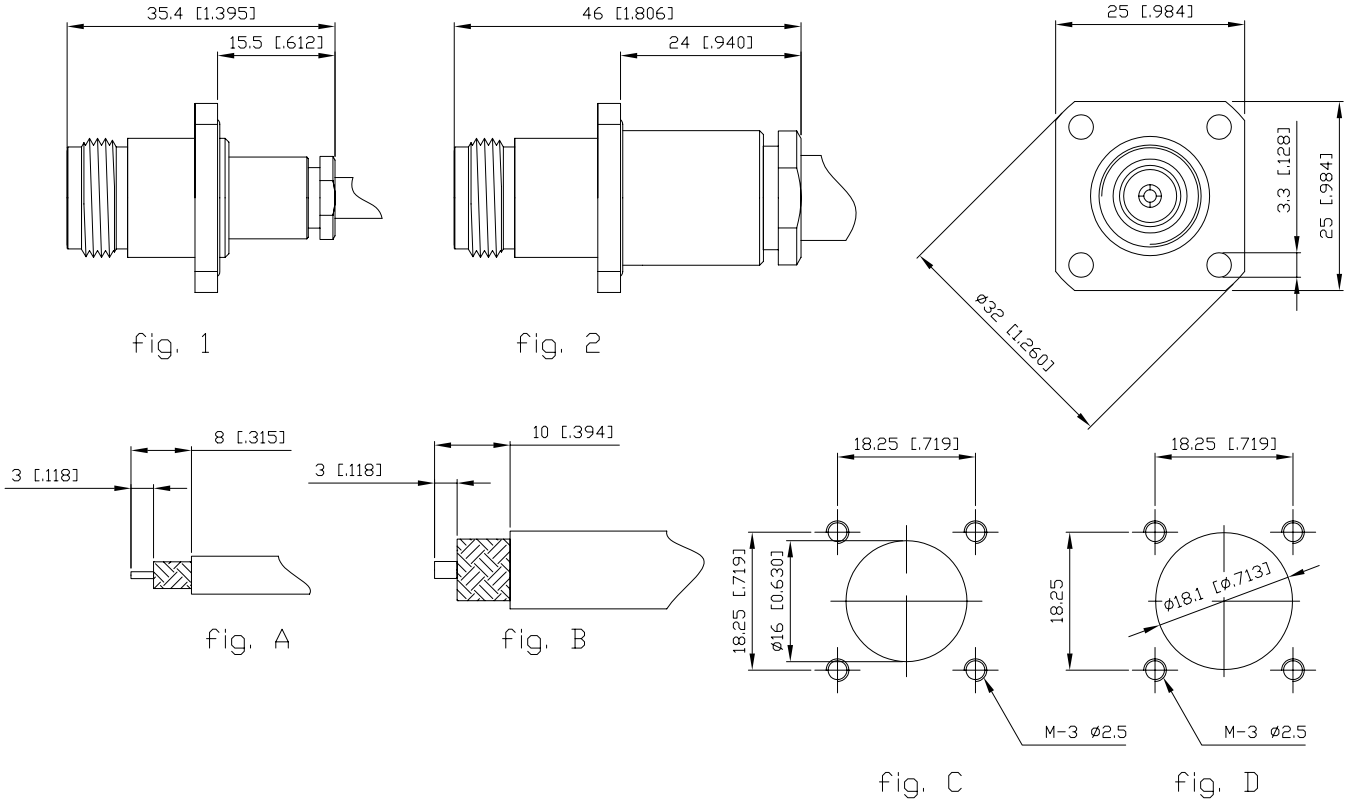

CABLE CABLE	*INSTRUC.* INSTRUC.	Ω	*ALFA`R CODE* CÓDIGO ALFA`R	*FIG.* FIG.			
RG-316	INS 21	50	A-N-22P25A-50	1	A	C	
RG-174; RG-188			A-N-22P26-50				
RG-58; RG-141; RG-303			A-N-22P50-50				
RG-142; RG-400			A-N-22P50A-50				
LMR-240			A-N-22P61D-50				
RG-8			A-N-22P101-50	2	B	D	
RG-213			A-N-22P103-50				
LMR-400; RG-165			A-N-22P103D-50				
RG-214			A-N-22P108-50				
RG-225			A-N-22P109-50				

RG-179	INS 21	75	A-N-22P25-75	1	A	C	
RG-187			A-N-22P26B-75				
ST-214			A-N-22P59-75				
FLEX-6			A-N-22P60-75				
RG-59			A-N-22P61-75				
0.8-0.7; 1505A; 9889; VK-6			A-N-22P61B-75				
14/8 CATV			A-N-22P102-75	2	B	D	
RG-11			A-N-22P103A-75				
RG-216			A-N-22P108A-75				

hembra recta panel crimp
plano antigiro
(montaje frontal)

straight crimp type jack panel
non-moving plane
(front mounting bulkhead)

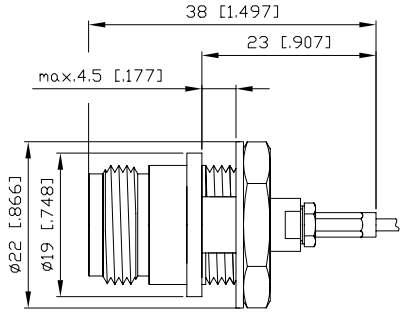

fig. 1

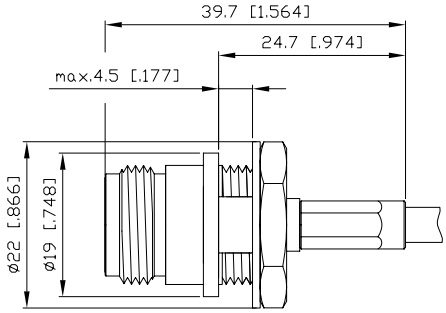

fig. 2

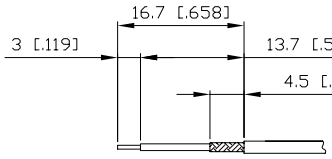

fig. A

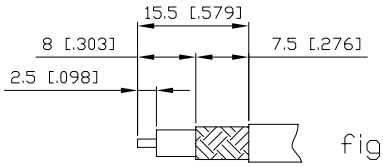

fig. B

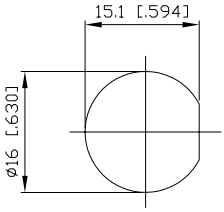

panel

CABLE CABLE	*INSTRUC.* INSTRUC.	Ω	*ALFA`R CODE* CÓDIGO ALFA`R	*FIG.* FIG.		*CRIMPING TOOL* HERRAMIENTA CRIMP
RG-178; RG-196	INS 8	50	A-N-25C18-50	1	A	A-EIN-C-1-C62
RG-316			A-N-25C25A-50			A-EIN-C-1-642
RG-174; RG-188			A-N-25C26-50			
RG-58; RG-141; RG-303	INS 9		A-N-25C50-50	2	B	A-EIN-C-1-342
RG-142; RG-400			A-N-25C50A-50			
RG-223			A-N-25C54-50			
S 04272 B			A-N-25C55-50			
LMR-240			A-N-25C61D-50			
5D-FB			A-N-25C76-50			A-EIN-C-1-52
LMR-300			A-N-25C76A-50			

TX-20	INS 8	75	A-N-25C16-75	1	A	A-EIN-C-1-C62
RG-179			A-N-25C25-75			A-EIN-C-1-642
RG-187			A-N-25C26B-75			
FLEX-2			A-N-25C27-75			
FLEX-3	INS 9		A-N-25C35-75	2	B	A-EIN-C-1-932
FLEX-4			A-N-25C45-75			
FLEX-5			A-N-25C47-75			
ST-214			A-N-25C59-75			
FLEX-6			A-N-25C60-75			A-EIN-C-1-342
RG-59			A-N-25C61-75			
0.8-0.7; 1505A; 9889; VK-6			A-N-25C61B-75			
TF-2240			A-N-25C67-75			A-EIN-C-1-52
RG-6 CATV			A-N-25C68-75			
FLEX-7			A-N-25C74-75			
VK-49			A-N-25C77-75			

hembra recta panel crimp
plano antigiro
(montaje frontal)

straight crimp type jack panel
non-moving plane
(front mounting bulkhaed)

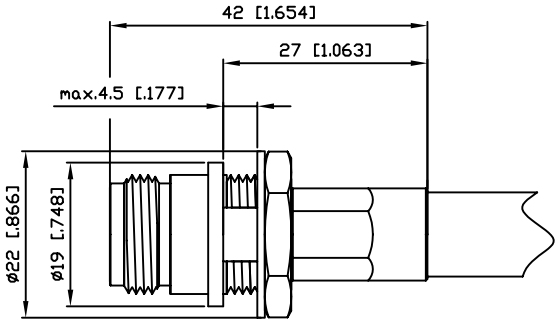

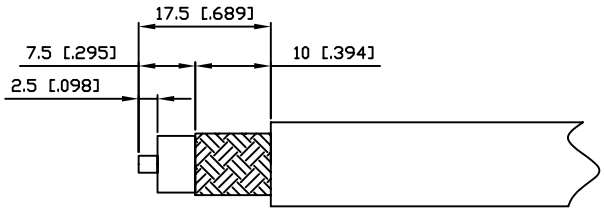

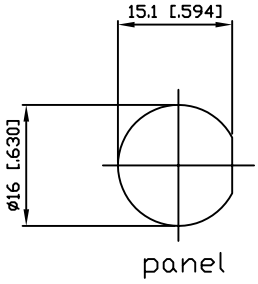

CABLE CABLE	*INSTRUC.* INSTRUC.	Ω	*ALFA`R CODE* CÓDIGO ALFA`R	*CRIMPING TOOL* HERRAMIENTA CRIMP
RG-393	INS 9	50	A-N-25C99-50	A-EIN-C-2-D2
ECO FLEX-10			A-N-25C100-50	
RG-8			A-N-25C101-50	
RG-213			A-N-25C103-50	
LMR-400; RG-165			A-N-25C103D-50	
RG-214			A-N-25C108-50	
RG-225			A-N-25C109-50	

RG-6 MIL	INS 9	75	A-N-25C84-75	A-EIN-C-2-D2
1.0/6.6/8.8			A-N-25C88-75	
14/8 CATV			A-N-25C102-75	
RG-11			A-N-25C103A-75	
RG-216			A-N-25C108A-75	

hembra recta panel crimp
pivote antigiro
(montaje frontal)

straight crimp type jack panel
non-moving pivot
(front mounting bulkhead)

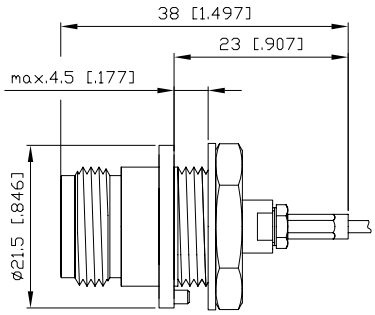

fig. 1

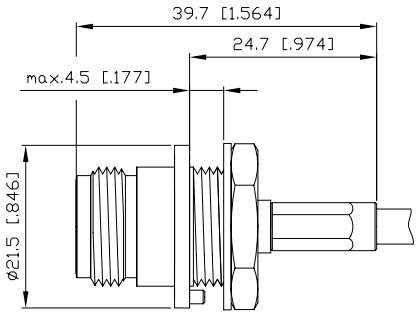

fig. 2

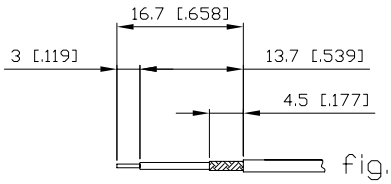

fig. A

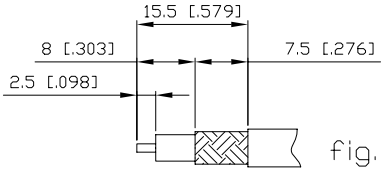

fig. B

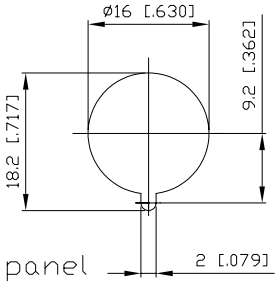

CABLE CABLE	*INSTRUC.* INSTRUC.	Ω	*ALFA`R CODE* CÓDIGO ALFA`R	*FIG.* FIG.		*CRIMPING TOOL* HERRAMIENTA CRIMP
RG-178; RG-196	INS 8	50	A-N-25C18-50-F	1	A	A-EIN-C-1-C62
RG-316			A-N-25C25A-50-F			A-EIN-C-1-642
RG-174; RG-188			A-N-25C26-50-F			
RG-58; RG-141; RG-303	INS 9		A-N-25C50-50-F	2	B	A-EIN-C-1-342
RG-142; RG-400			A-N-25C50A-50-F			
RG-223			A-N-25C54-50-F			
S 04272 B			A-N-25C55-50-F			
LMR-240			A-N-25C61D-50-F			
5D-FB			A-N-25C76-50-F			A-EIN-C-1-52
LMR-300			A-N-25C76A-50-F			

TX-20	INS 8	75	A-N-25C16-75-F	1	A	A-EIN-C-1-C62
RG-179			A-N-25C25-75-F			A-EIN-C-1-642
RG-187			A-N-25C26B-75-F			
FLEX-2			A-N-25C27-75-F			
FLEX-3	INS 9		A-N-25C35-75-F	2	B	A-EIN-C-1-932
FLEX-4			A-N-25C45-75-F			
FLEX-5			A-N-25C47-75-F			
ST-214			A-N-25C59-75-F			
FLEX-6			A-N-25C60-75-F			A-EIN-C-1-342
RG-59			A-N-25C61-75-F			
0.8-0.7; 1505A; 9889; VK-6			A-N-25C61B-75-F			
TF-2240			A-N-25C67-75-F			A-EIN-C-1-52
RG-6 CATV			A-N-25C68-75-F			
FLEX-7			A-N-25C74-75-F			
VK-49			A-N-25C77-75-F			

hembra recta panel crimp
pivote antigiro
(montaje frontal)

straight crimp type jack panel
non-moving pivot
(front mounting bulkhead)

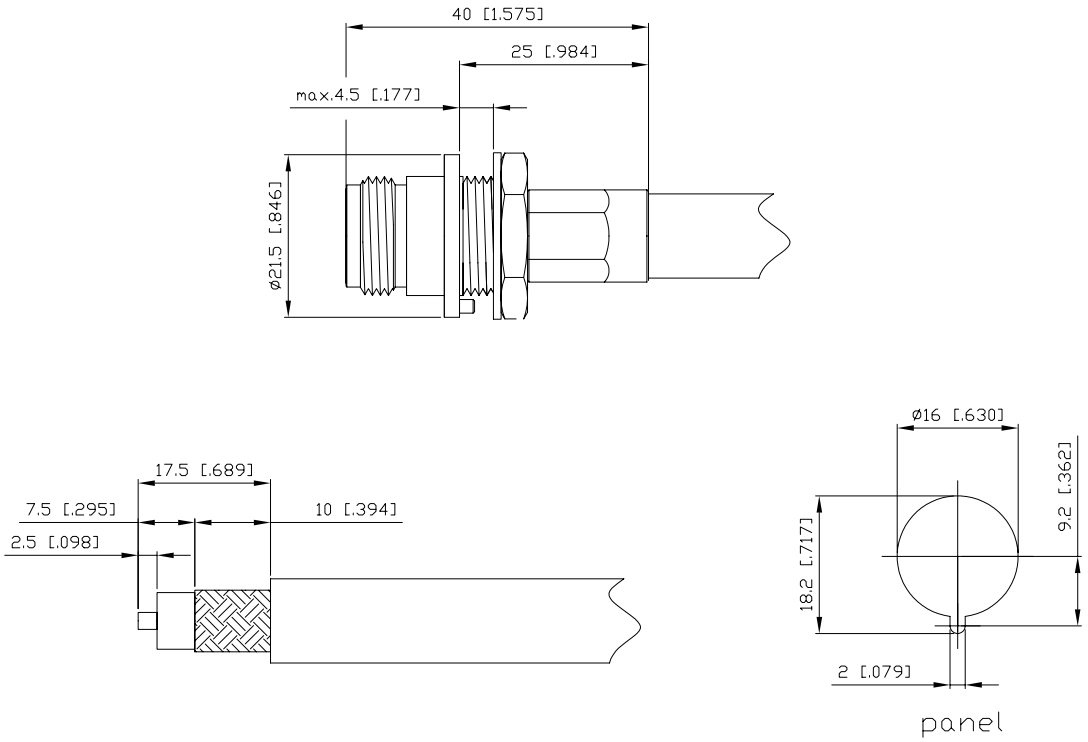

CABLE CABLE	*INSTRUC.* INSTRUC.	Ω	*ALFA`R CODE* CÓDIGO ALFA`R	*FIG.* FIG.		*CRIMPING TOOL* HERRAMIENTA CRIMP
RG-393	INS 9	50	A-N-25C99-50-F	2	B	A-EIN-C-2-D2
ECO FLEX-10			A-N-25C100-50-F			
RG-8			A-N-25C101-50-F			
RG-213			A-N-25C103-50-F			
LMR-400; RG-165			A-N-25C103D-50-F			
RG-214			A-N-25C108-50-F			
RG-225			A-N-25C109-50-F			

RG-6 MIL	INS 9	75	A-N-25C84-75-F	A-EIN-C-2-D2
1.0/6.6/8.8			A-N-25C88-75-F	
14/8 CATV			A-N-25C102-75-F	
RG-11			A-N-25C103A-75-F	
RG-216			A-N-25C108A-75-F	

hembra recta panel crimp
(montaje frontal)
estanco

straight crimp type jack panel
(front mounting bulkhead)
waterproof

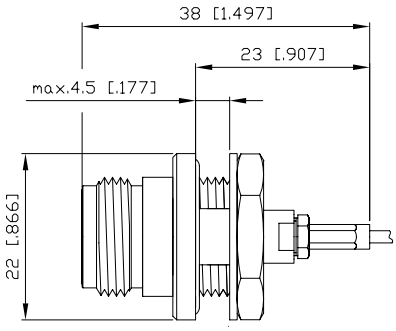

fig. 1

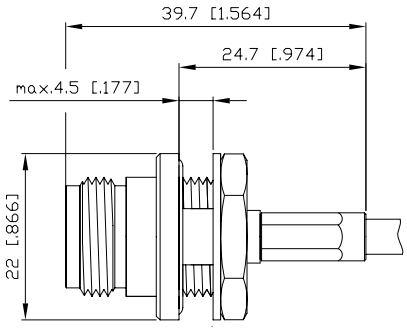

fig. 2

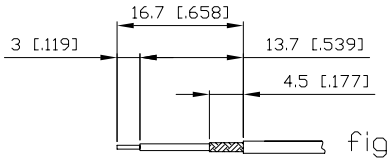

fig. A

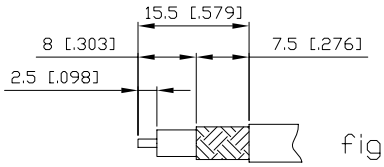

fig. B

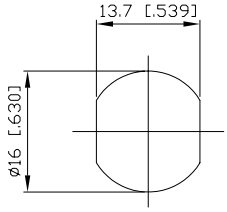

panel

CABLE CABLE	*INSTRUC.* INSTRUC.	Ω	*ALFA`R CODE* CÓDIGO ALFA`R	*FIG.* FIG.		*CRIMPING TOOL* HERRAMIENTA CRIMP
RG-178; RG-196	INS 8	50	A-N-25C18-50-C	1	A	A-EIN-C-1-C62
RG-316			A-N-25C25A-50-C			A-EIN-C-1-642
RG-174; RG-188			A-N-25C26-50-C			
RG-58; RG-141; RG-303	INS 9		A-N-25C50-50-C	2	B	A-EIN-C-1-342
RG-142; RG-400			A-N-25C50A-50-C			
RG-223			A-N-25C54-50-C			
S 04272 B			A-N-25C55-50-C			
LMR-240			A-N-25C61D-50-C			
5D-FB			A-N-25C76-50-C			A-EIN-C-1-52
LMR-300			A-N-25C76A-50-C			

TX-20	INS 8	75	A-N-25C16-75-C	1	A	A-EIN-C-1-C62
RG-179			A-N-25C25-75-C			A-EIN-C-1-642
RG-187			A-N-25C26B-75-C			
FLEX-2			A-N-25C27-75-C			
FLEX-3	INS 9		A-N-25C35-75-C	2	B	A-EIN-C-1-932
FLEX-4			A-N-25C45-75-C			
FLEX-5			A-N-25C47-75-C			
ST-214			A-N-25C59-75-C			
FLEX-6			A-N-25C60-75-C			A-EIN-C-1-342
RG-59			A-N-25C61-75-C			
0.8-0.7; 1505A; 9889; VK-6			A-N-25C61B-75-C			
TF-2240			A-N-25C67-75-C			A-EIN-C-1-52
RG-6 CATV			A-N-25C68-75-C			
FLEX-7			A-N-25C74-75-C			
VK-49			A-N-25C77-75-C			

hembra recta panel crimp
(montaje frontal)
estanco

straight crimp type jack panel
(front mounting bulkhead)
waterproof

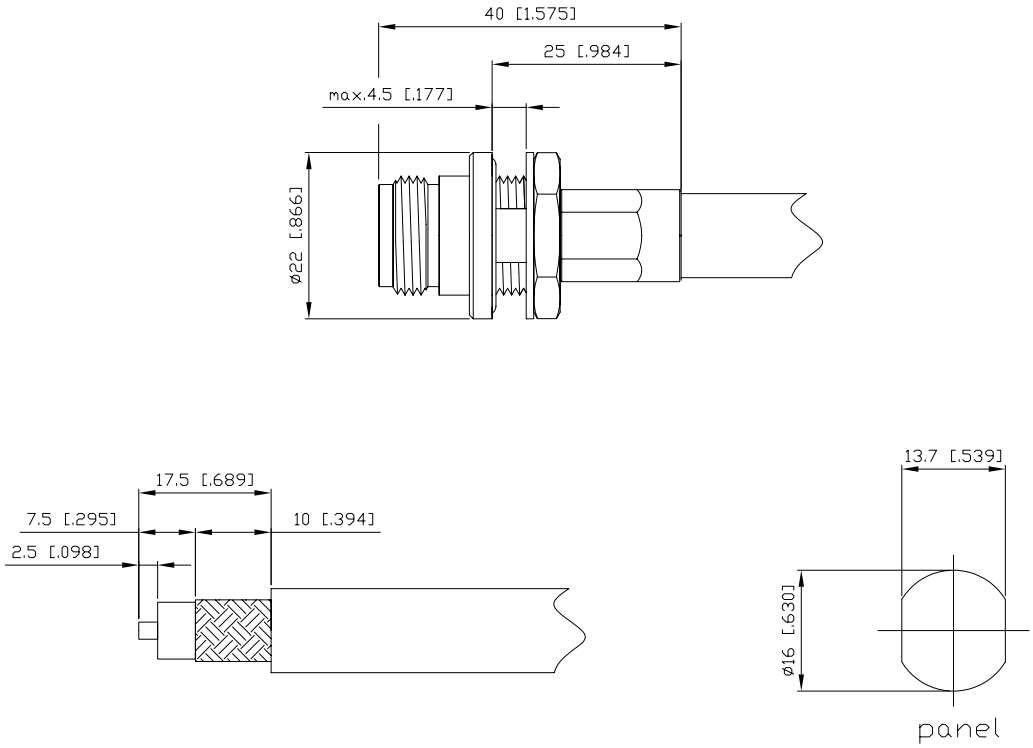

CABLE CABLE	*INSTRUC.* INSTRUC.	Ω	*ALFA`R CODE* CÓDIGO ALFA`R	*CRIMPING TOOL* HERRAMIENTA CRIMP
RG-393	INS 9	50	A-N-25C99-50-C	A-EIN-C-2-D2
ECO FLEX-10			A-N-25C100-50-C	
RG-8			A-N-25C101-50-C	
RG-213			A-N-25C103-50-C	
LMR-400; RG-165			A-N-25C103D-50-C	
RG-214			A-N-25C108-50-C	
RG-225			A-N-25C109-50-C	

RG-6 MIL	INS 9	75	A-N-25C84-75-C	A-EIN-C-2-D2
1.0/6.6/8.8			A-N-25C88-75-C	
14/8 CATV			A-N-25C102-75-C	
RG-11			A-N-25C103A-75-C	
RG-216			A-N-25C108A-75-C	

hembra recta panel crimp
(montaje trasero)
estanco

straight crimp type jack panel
(rear mounting bulkhead)
waterproof

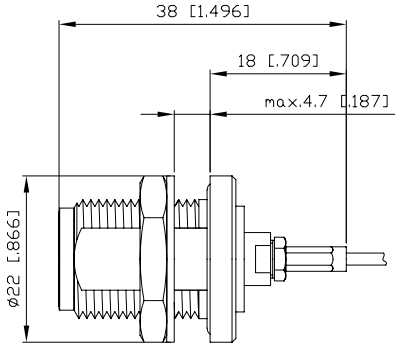

fig. 1

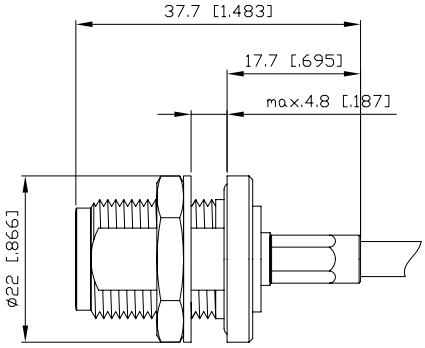

fig. 2

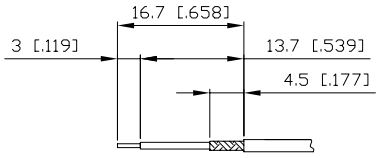

fig. A

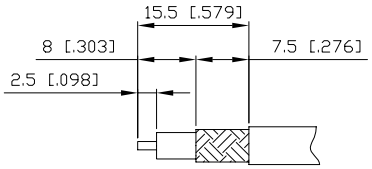

fig. B

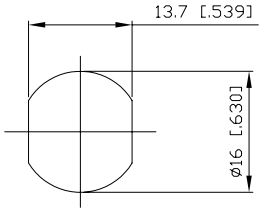

panel

CABLE CABLE	*INSTRUC.* INSTRUC.	Ω	*ALFA`R CODE* CÓDIGO ALFA`R	*FIG.* FIG.		*CRIMPING TOOL* HERRAMIENTA CRIMP
RG-178; RG-196	INS 8	50	A-N-26C18-50	1	A	A-EIN-C-1-C62
RG-316			A-N-26C25A-50			A-EIN-C-1-642
RG-174; RG-188			A-N-26C26-50			
RG-58; RG-141; RG-303	INS 9		A-N-26C50-50	2	B	A-EIN-C-1-342
RG-142; RG-400			A-N-26C50A-50			
RG-223			A-N-26C54-50			
S 04272 B			A-N-26C55-50			
LMR-240			A-N-26C61D-50			
5D-FB			A-N-26C76-50			A-EIN-C-1-52
LMR-300			A-N-26C76A-50			

TX-20	INS 8	75	A-N-26C16-75	1	A	A-EIN-C-1-C62
RG-179			A-N-26C25-75			A-EIN-C-1-642
RG-187			A-N-26C26B-75			
FLEX-2			A-N-26C27-75			
FLEX-3	INS 9		A-N-26C35-75	2	B	A-EIN-C-1-932
FLEX-4			A-N-26C45-75			
FLEX-5			A-N-26C47-75			
ST-214			A-N-26C59-75			
FLEX-6			A-N-26C60-75			A-EIN-C-1-342
RG-59			A-N-26C61-75			
0.8-0.7; 1505A; 9889; VK-6			A-N-26C61B-75			
TF-2240			A-N-26C67-75			A-EIN-C-1-52
RG-6 CATV			A-N-26C68-75			
FLEX-7			A-N-26C74-75			
VK-49			A-N-26C77-75			

ALFA`R

hembra recta panel crimp
(montaje trasero)
estanco

straight crimp type bulkhead jack
(rear mounting)
waterproof

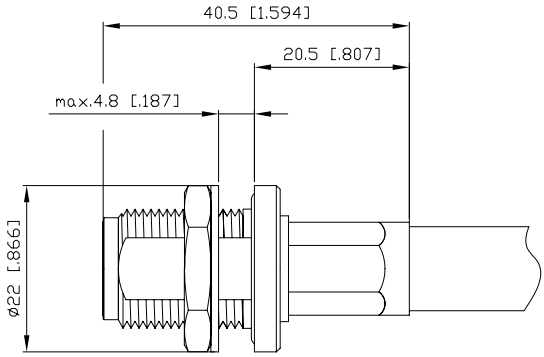

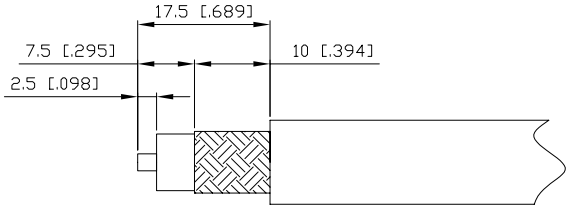

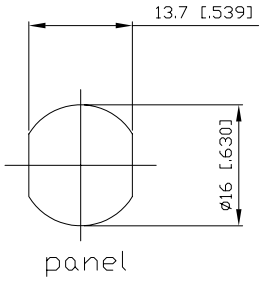

CABLE CABLE	*INSTRUC.* INSTRUC.	Ω	*ALFA`R CODE* CÓDIGO ALFA`R	*CRIMPING TOOL* HERRAMIENTA CRIMP
RG-393	INS 9	50	A-N-26C99-50	A-EIN-C-2-D2
ECO FLEX-10			A-N-26C100-50	
RG-8			A-N-26C101-50	
RG-213			A-N-26C103-50	
LMR-400; RG-165			A-N-26C103D-50	
RG-214			A-N-26C108-50	
RG-225			A-N-26C109-50	

RG-6 MIL	INS 9	75	A-N-26C84-75	A-EIN-C-2-D2
1.0/6.6/8.8			A-N-26C88-75	
14/8 CATV			A-N-26C102-75	
RG-11			A-N-26C103A-75	
RG-216			A-N-26C108A-75	

hembra recta panel prensaestopas (montaje trasero) estanco

straight clamp type jack panel (rear mounting bulkhead) waterproof

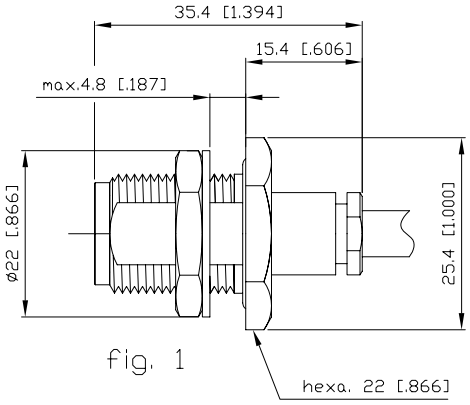

fig. 1

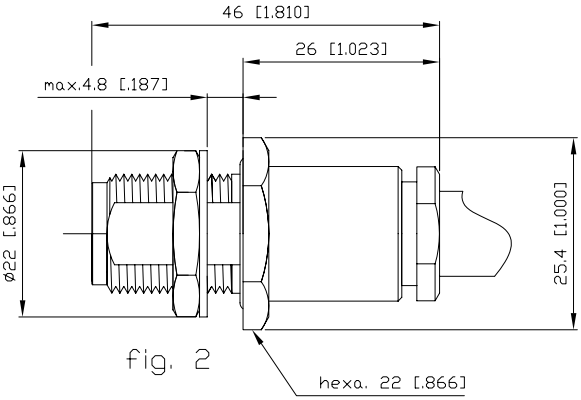

fig. 2

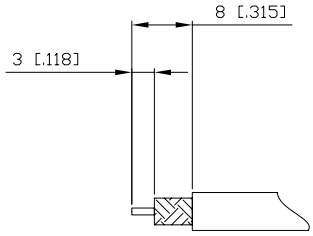

fig. A

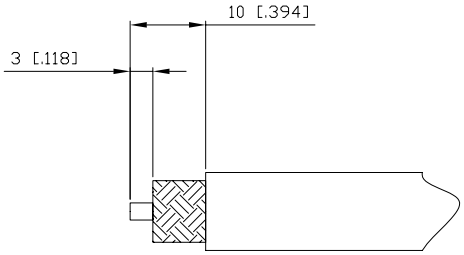

fig. B

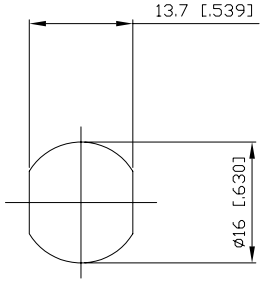

panel

CABLE CABLE	*INSTRUC.* INSTRUC.	Ω	*ALFA`R CODE* CÓDIGO ALFA`R	*FIG.* FIG.		
RG-316	INS 21	50	A-N-26P25A-50	1	A	
RG-174; RG-188			A-N-26P26-50			
RG-58; RG-141; RG-303			A-N-26P50-50			
RG-142; RG-400			A-N-26P50A-50			
LMR-240			A-N-26P61D-50			
RG-8			A-N-26P101-50	2	B	
RG-213			A-N-26P103-50			
LMR-400; RG-165			A-N-26P103D-50			
RG-214			A-N-26P108-50			
RG-225			A-N-26P109-50			

RG-179	INS 21	75	A-N-26P25-75	1	A	
RG-187			A-N-26P26B-75			
ST-214			A-N-26P59-75			
FLEX-6			A-N-26P60-75			
RG-59			A-N-26P61-75			
0.8-0.7; 1505A; 9889; VK-6			A-N-26P61B-75			
14/8 CATV			A-N-26P102-75	2	B	
RG-11			A-N-26P103A-75			
RG-216			A-N-26P108A-75			

Conectores panel con contacto central soldable

Receptacle connectors with solder inner contact

macho panel
(pletina cuadrada)

plug receptacle
(square flange)

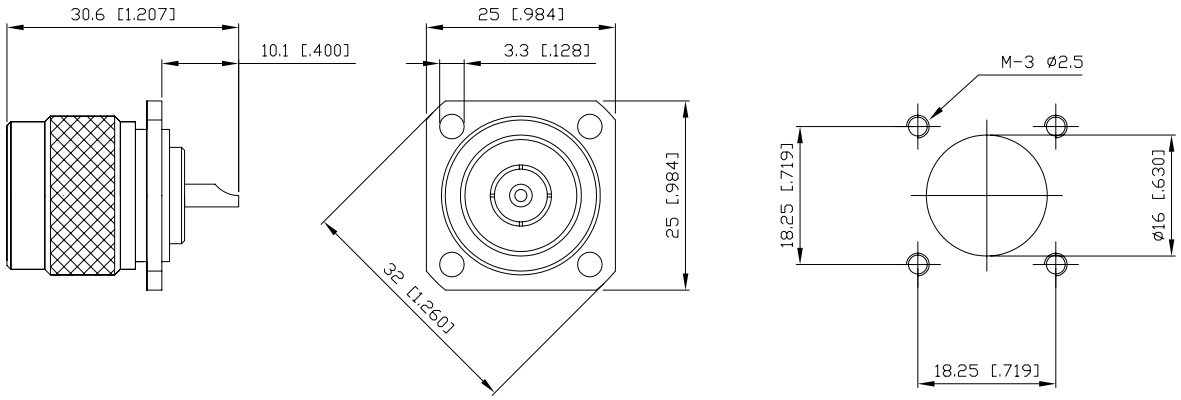

NOTE NOTA	Ω	*ALFA`R CODE* CÓDIGO ALFA`R	*SOLDER TAG* TERMINAL MASA
front mounting montaje frontal	50	A-N-12TF-50	A-ACC-TM-030

front mounting montaje frontal	75	A-N-12TF-75	A-ACC-TM-030

hembra panel
(pletina cuadrada)

jack receptacle
(square flange)

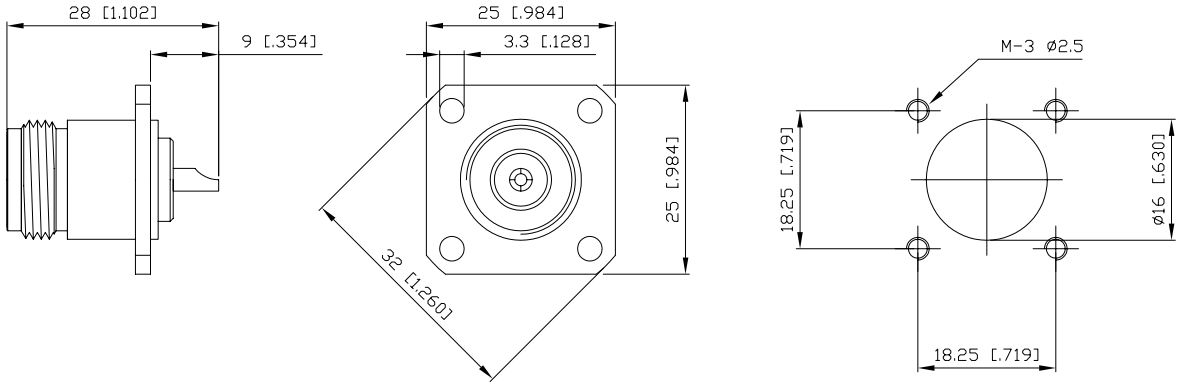

NOTE NOTA	Ω	*ALFA`R CODE* CÓDIGO ALFA`R	*SOLDER TAG* TERMINAL MASA
front mounting montaje frontal	50	A-N-22TF-50	A-ACC-TM-030

front mounting montaje frontal	75	A-N-22TF-75	A-ACC-TM-030

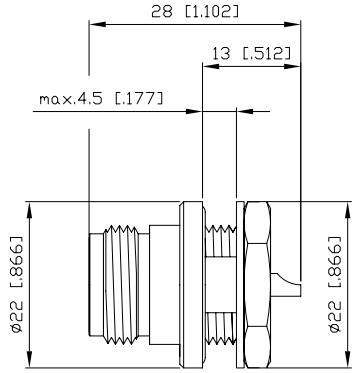

fig. 1

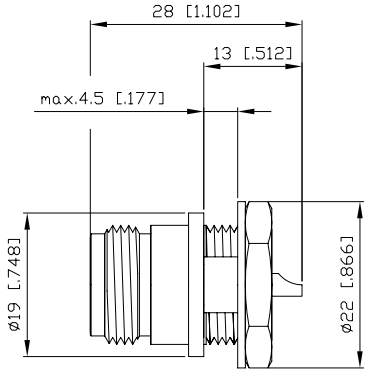

fig. 2

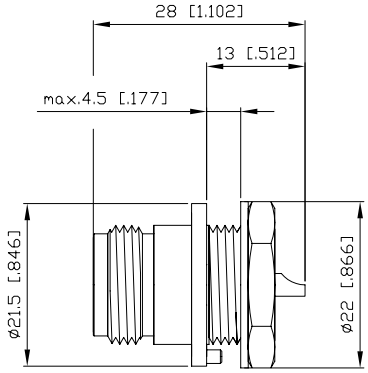

fig. 3

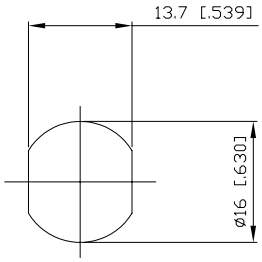

fig. A

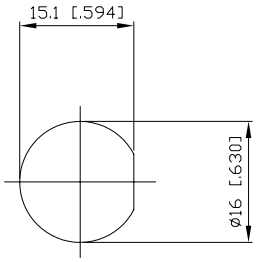

fig. B

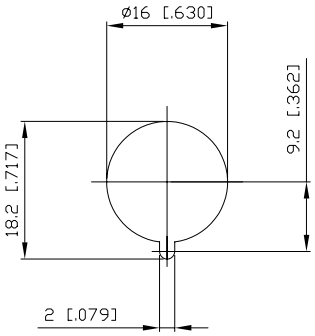

fig. C

NOTE NOTA		Ω	*ALFA`R CODE* CÓDIGO ALFA`R	*FIG.* FIG.		*SOLDER TAG* TERMINAL MASA
water estanco	*non-moving 2 planes* 2 planos antigiro	50	A-N-25TF-50-C	1	A	A-ACC-TM-160
	non-moving plane plano antigiro		A-N-25TF-50	2	B	
	non-moving pivot pivote antigiro		A-N-25TF-50-F	3	C	

water estanco	*non-moving 2 planes* 2 planos antigiro	75	A-N-25TF-75-C	1	A	A-ACC-TM-160
	non-moving plane plano antigiro		A-N-25TF-75	2	B	
	non-moving pivot pivote antigiro		A-N-25TF-75-F	3	C	

hembra panel

bulkhead jack receptacle

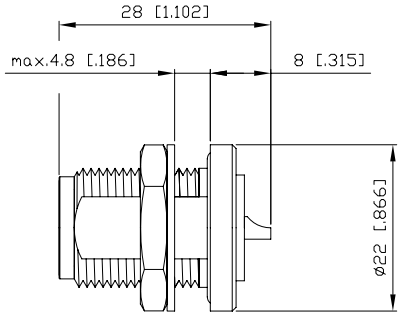

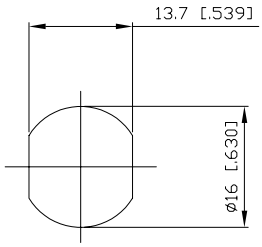

NOTE NOTA	Ω	*ALFA`R CODE* CÓDIGO ALFA`R	
waterproof estanco	50	A–N–26TF–50	

waterproof estanco	75	A–N–26TF–75	

Contacto central plano

Tab contact Stripline

hembra panel

jack receptacle

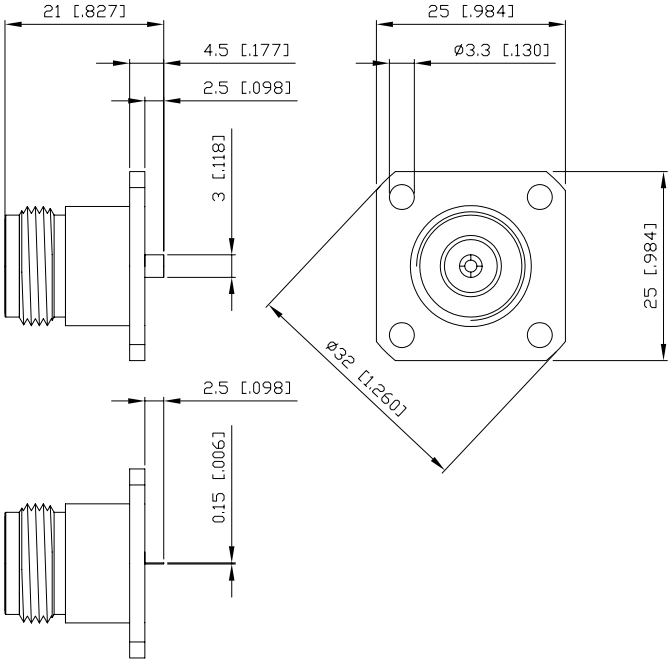

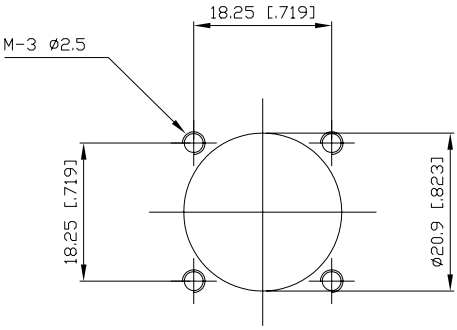

NOTE NOTA	Ω	*ALFA`R CODE* CÓDIGO ALFA`R	
square flange pletina cuadrada	50	A–N–22TP–50	

Conectores panel con contacto central rosca M-4

Receptacle connectors with thread M-4 inner contact

macho panel
(pletina cuadrada)

plug receptacle
(square flange)

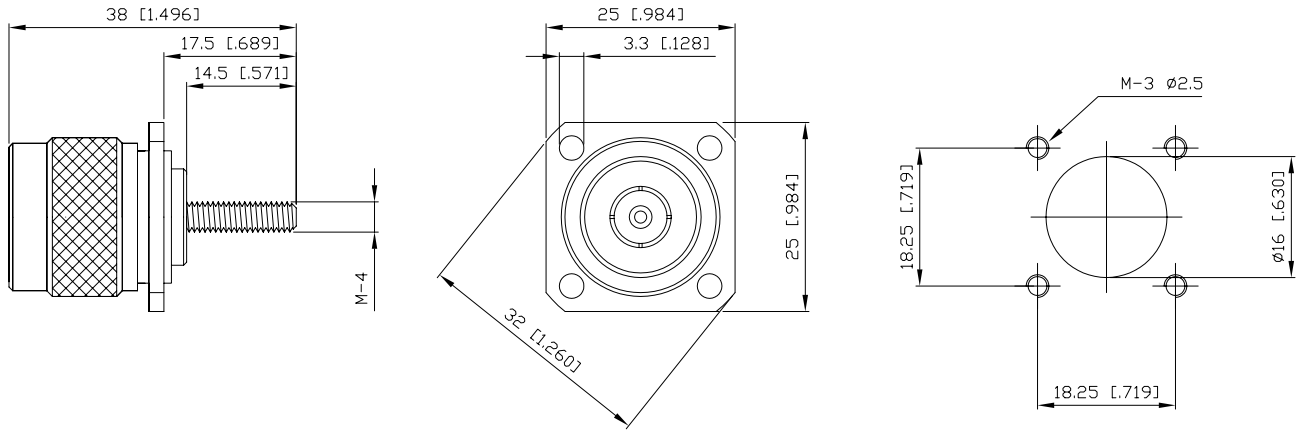

NOTE NOTA	Ω	*ALFA`R CODE* CÓDIGO ALFA`R	*SOLDER TAG* TERMINAL MASA
front mounting montaje frontal	50	A-N-12TR-50	A-ACC-TM-030

hembra panel
(pletina cuadrada)

jack receptacle
square flange

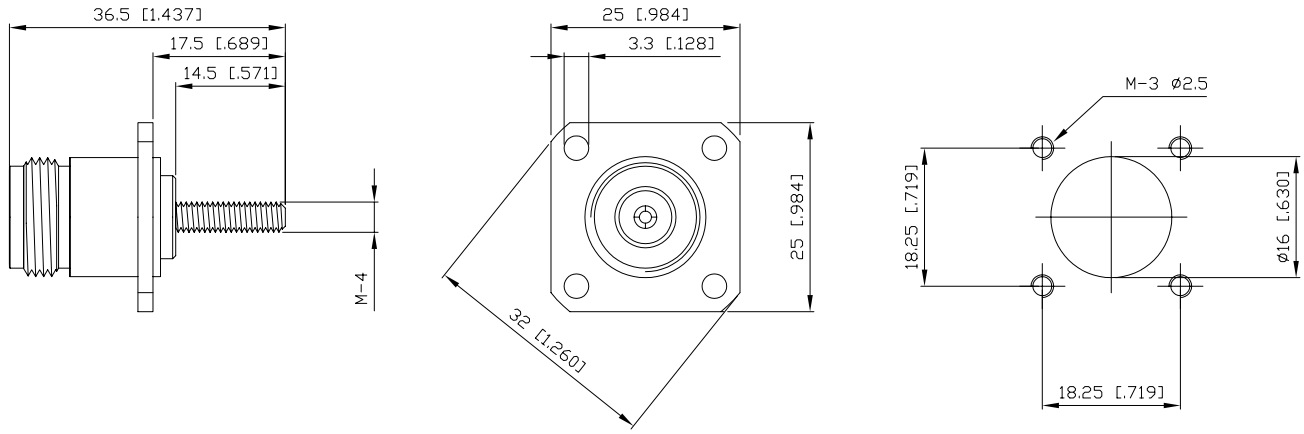

NOTE NOTA	Ω	*ALFA`R CODE* CÓDIGO ALFA`R	*SOLDER TAG* TERMINAL MASA
front mounting montaje frontal	50	A-N-22TR-50	A-ACC-TM-030

hembra panel

bulkhead jack receptacle

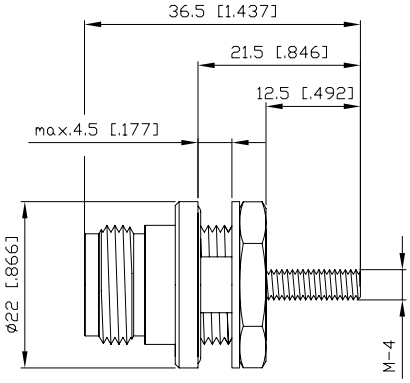

fig. 1

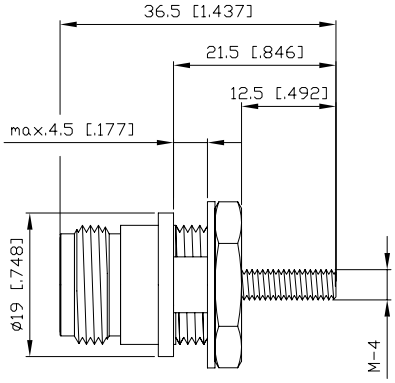

fig. 2

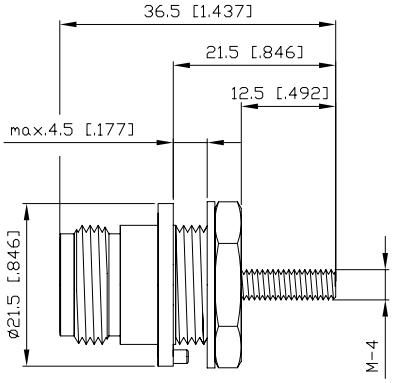

fig. 3

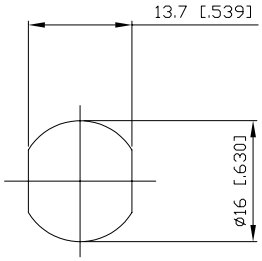

fig. A

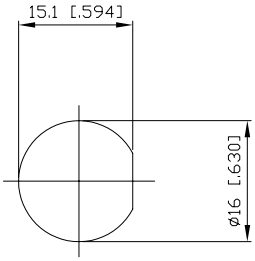

fig. B

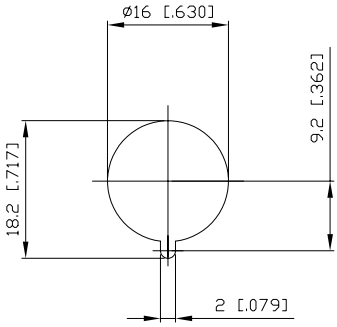

fig. C

NOTE NOTA		Ω	*ALFA`R CODE* CÓDIGO ALFA`R	*FIG.* FIG.		*SOLDER TAG* TERMINAL MASA
waterproof estanco	*non-moving 2 planes* 2 planos antigiro	50	A-N-25TR-50-C	1	A	A-ACC-TM-160
	non-moving plane plano antigiro		A-N-25TR-50	2	B	
	non-moving pivot pivote antigiro		A-N-25TR-50-F	3	C	

prolongación *prolongation*

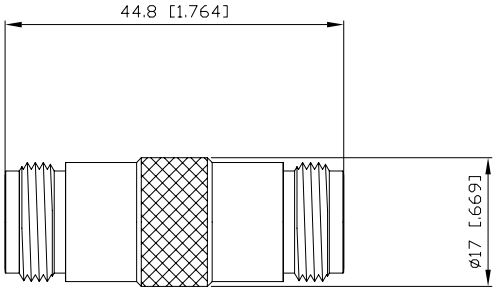

NOTE NOTA	Ω	*ALFA`R CODE* CÓDIGO ALFA`R	
jack–jack hembra–hembra	50	A–N–00–50	

jack–jack hembra–hembra	75	A–N–00–75	

prolongación *prolongation*

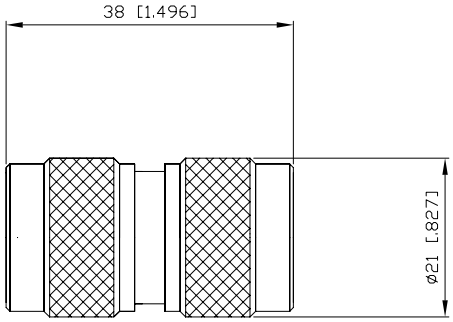

NOTE NOTA	Ω	*ALFA`R CODE* CÓDIGO ALFA`R	
plug–plug macho–macho	50	A–N–03–50	

plug–plug macho–macho	75	A–N–03–75	

pasamuros hembra–hembra

jack–jack panel adaptor

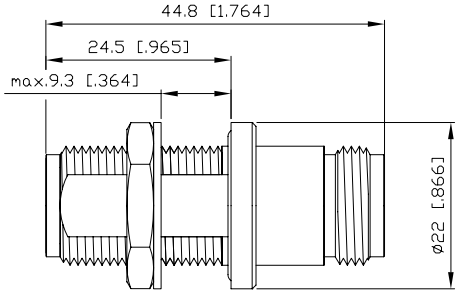

fig.1

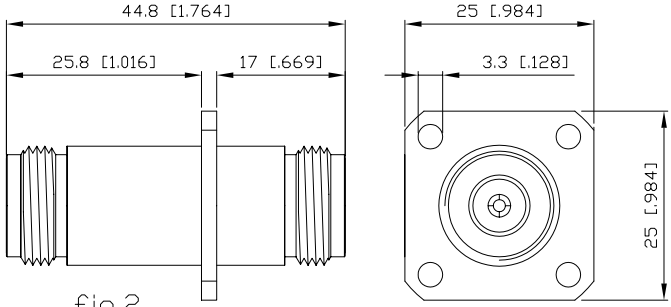

fig.2

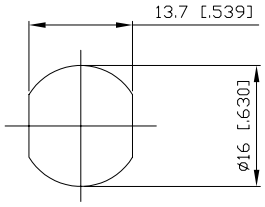

fig.A

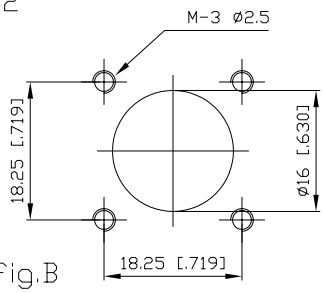

fig.B

NOTE NOTE	Ω	*ALFA'R CODE* CÓDIGO ALFA`R	*FIG.* FIG.		
waterproof bulkhead estanco	50	A–N–02–50	1	A	
square flange pletina cuadrada		A–N–04–50	2	B	

waterproof bulkhead estanco	75	A–N–02–75	1	A	
square flange pletina cuadrada		A–N–04–75	2	B	

adaptador en T

T adaptor

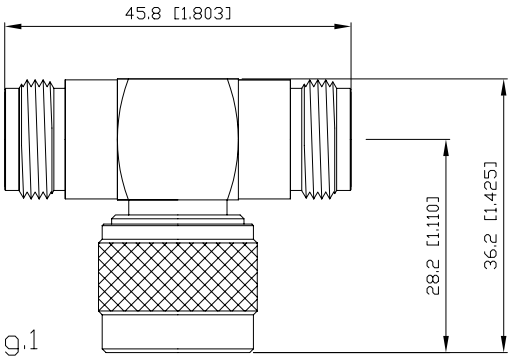

fig.1

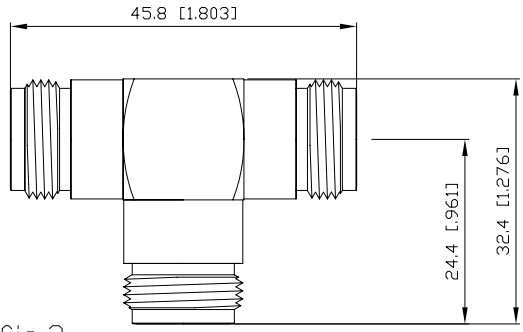

fig.2

NOTE NOTE	Ω	*ALFA'R CODE* CÓDIGO ALFA`R	*FIG.* FIG.	
jack–plug–jack hembra–macho–hembra	50	A–N–40–50	1	
jack–jack–jack hembra–hembra–hembra		A–N–44–50	2	

jack–plug–jack hembra–macho–hembra	75	A–N–40–75	1	
jack–jack–jack hembra–hembra–hembra		A–N–44–75	2	

adaptador a 90° *90° adaptor*

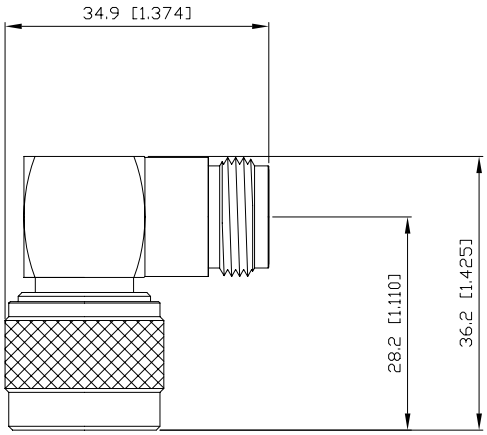

NOTE NOTA	Ω	*ALFA`R CODE* CÓDIGO ALFA`R	
plug–jack macho–hembra	50	A–N–31–50	

plug–jack macho–hembra	75	A–N–31–75	

Protectores *Protectives*

tapón para hembra *cap for jack*

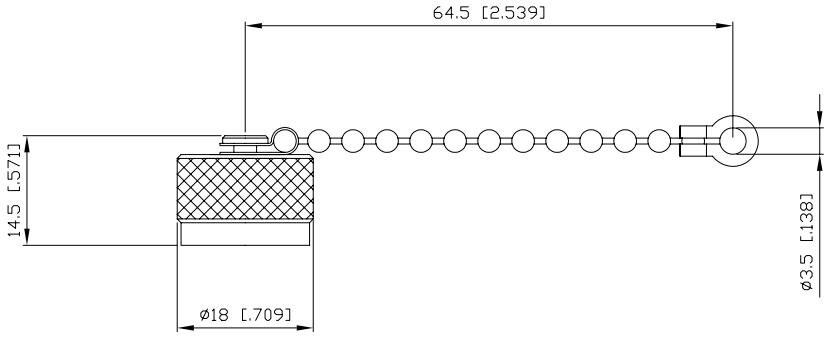

NOTE NOTA		Ω	*ALFA`R CODE* CÓDIGO ALFA`R	
protective cap tapón protector	*without chain* sin cadena		A–N–51–00–A	
protective cap tapón protector	*with chain* con cadena		A–N–51–00	
short circuit cap tapón corto circuito	*without chain* sin cadena	50	A–N–53–50–A	
		75	A–N–53–75–A	
short circuit cap tapón corto circuito	*with chain* con cadena	50	A–N–53–50	
		75	A–N–53–75	

rango de frecuencia: 1000 MHz
potencia: 0.5W

frequency range: 1000 MHz
power: 0.5W

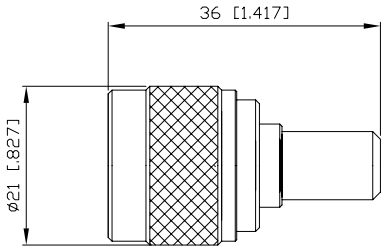

fig. 1

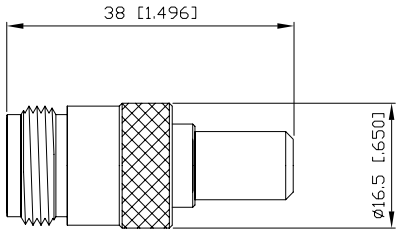

fig. 2

NOTE NOTA	*FIG.* FIG.		*IMPEDANCE* IMPEDANCIA	*ALFA`R CODE* CÓDIGO ALFA`R	VSWR 300MHz	VSWR 1000MHz
plug macho	1	0.5 W	50Ω ±1Ω	A-N-54-50	≤1.05	≤1.1
			75Ω ±1Ω	A-N-54-75		
jack hembra	2		50Ω ±1Ω	A-N-55-50		
			75Ω ±1Ω	A-N-55-75		

rango de frecuencia: 4GHz
potencia: 1W, 5W, 10W

frequency range: 4GHz
power: 1W, 5W, 10W

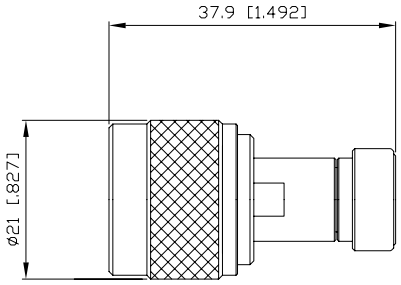

fig. 1

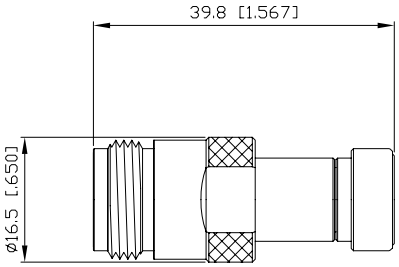

fig. 2

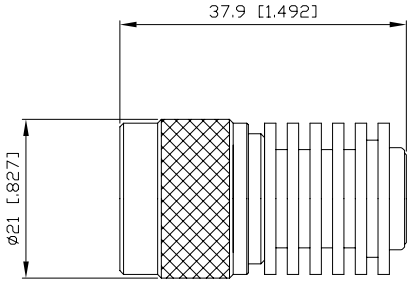

fig. 3

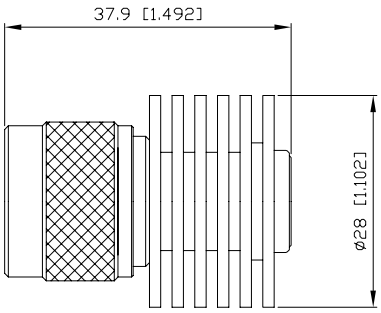

fig. 4

NOTE NOTA		*FIG.* FIG.	*POWER* POTENCIA	*IMPEDANCE* IMPEDANCIA	*ALFA`R CODE* CÓDIGO ALFA`R	VSWR 2.5 GHz	VSWR 4 GHz
plug	macho	1	1 W	50Ω ±1Ω	A-N-54-50-A	≤1.15	≤1.20
jack	hembra	2			A-N-55-50-A		
plug	macho	3	5 W		A-N-54-50-B		≤1.19
		4	10 W		A-N-54-50-C	≤1.15 max.	--

DIMENSIONES INTERCONEXIÓN
CONTACTO CENTRAL INVERTIDO

INTERFACE DIMENSIONS
REVERSE INNER CONTACT

50 Ω

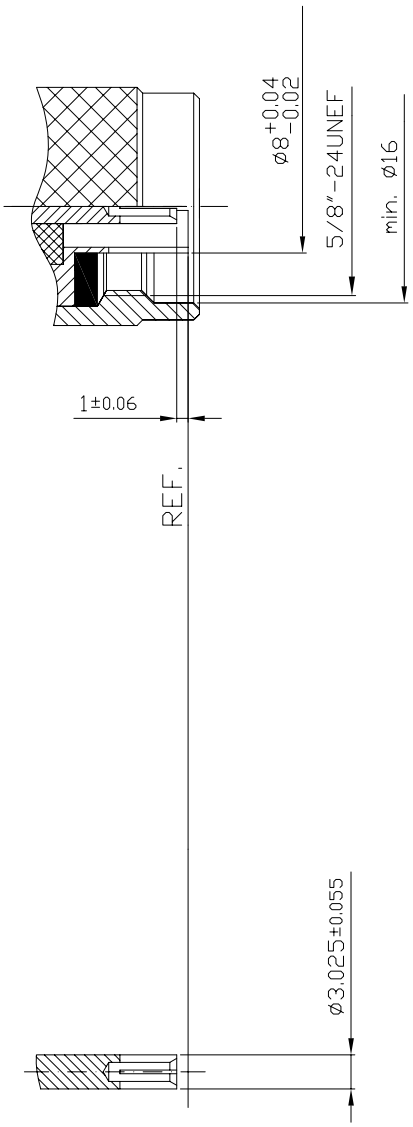

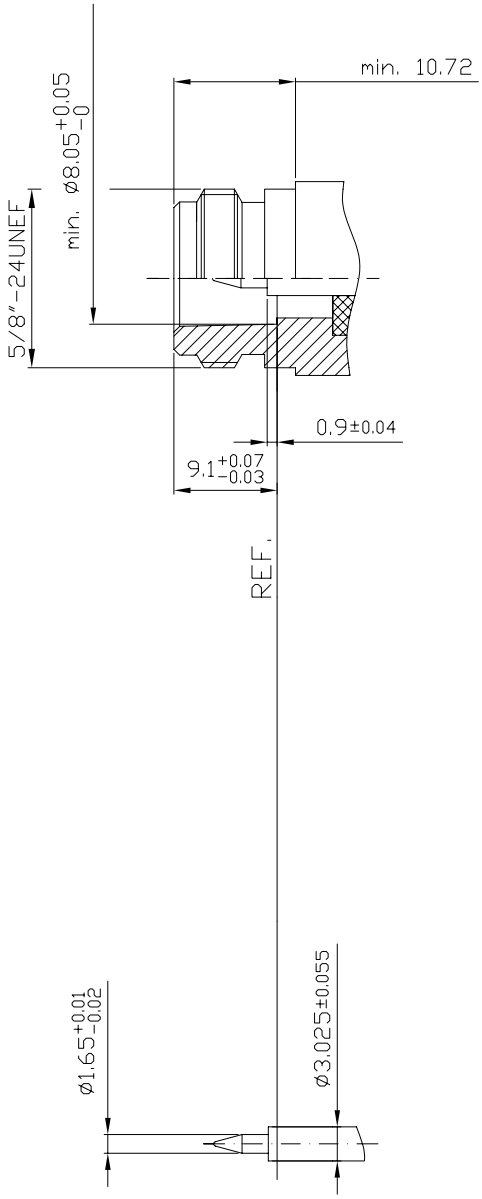

ALFA'R

POLARIDAD INVERTIDA
macho recto crimp

REVERSE POLARITY
straight crimp type plug

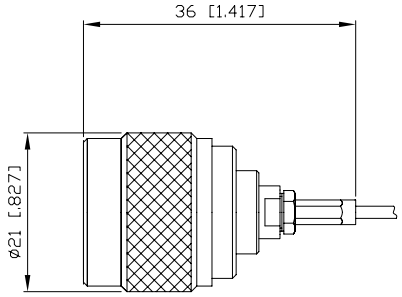

fig.1

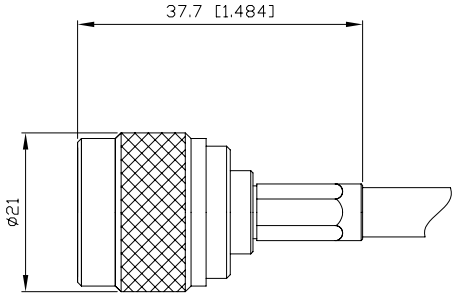

fig.2

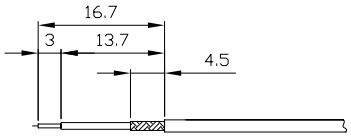

fig.A

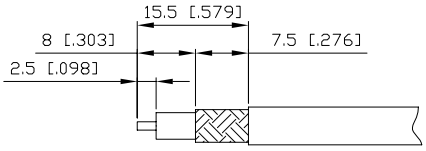

fig.B

CABLE CABLE	*INSTRUC.* INSTRUC.	Ω	*ALFA`R CODE* CÓDIGO ALFA`R	*FIG.* FIG.		*CRIMPING TOOL* HERRAMIENTA CRIMP
RG-178; RG-196	INS 8	50	A-NI-20C18-50	1	A	A-EIN-C-1-C62
RG-316			A-NI-20C25A-50			A-EIN-C-1-642
RG-174; RG-188			A-NI-20C26-50			
RG-58; RG-141; RG-303	INS 9		A-NI-20C50-50	2	B	A-EIN-C-1-342
RG-142; RG-400			A-NI-20C50A-50			
RG-223			A-NI-20C54-50			
S 04272 B			A-NI-20C55-50			
LMR-240			A-NI-20C61D-50			

POLARIDAD INVERTIDA
macho crimp recto

REVERSE POLARITY
straight crimp type plug

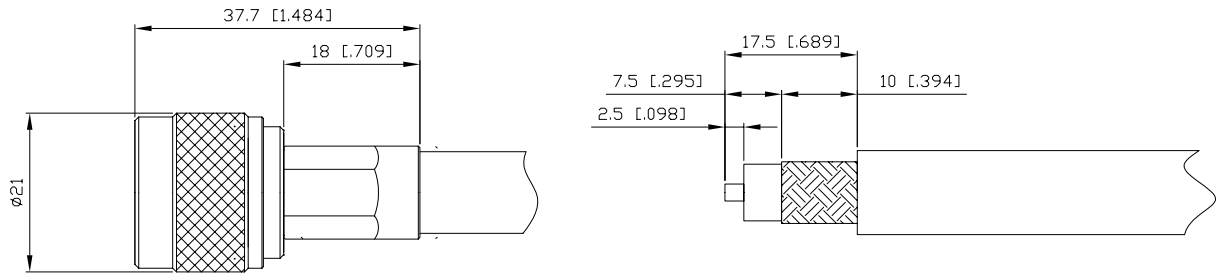

CABLE CABLE	*INSTRUC.* INSTRUC.	Ω	*ALFA`R CODE* CÓDIGO ALFA`R	*CRIMPING TOOL* HERRAMIENTA CRIMP
RG-393	INS 9	50	A-NI-20C99-50	A-EIN-C-2-D2
ECO FLEX-10			A-NI-20C100-50	
RG-8			A-NI-20C101-50	
RG-213			A-NI-20C103-50	
LMR-400; RG-165			A-NI-20C103D-50	
RG-214			A-NI-20C108-50	
RG-225			A-NI-20C109-50	

POLARIDAD INVERTIDA
macho crimp recto
estanco

REVERSE POLARITY
straight crimp type plug
waterproof

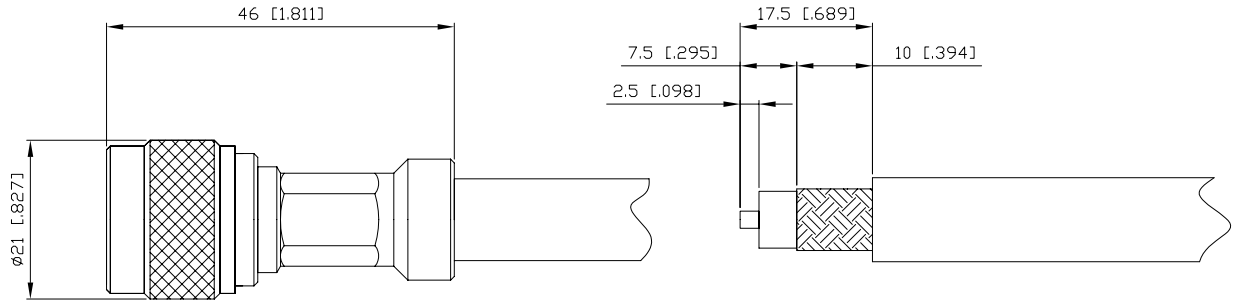

CABLE CABLE	*INSTRUC.* INSTRUC.	Ω	*ALFA`R CODE* CÓDIGO ALFA`R	*CRIMPING TOOL* HERRAMIENTA CRIMP
RG-214	INS 35	50	A-NI-20C108-50-A	A-EIN-C-2-D2

POLARIDAD INVERTIDA
hembra recta crimp

REVERSE POLARITY
straight crimp type jack

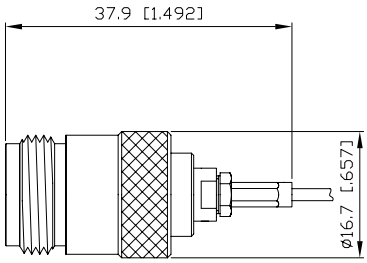

fig.1

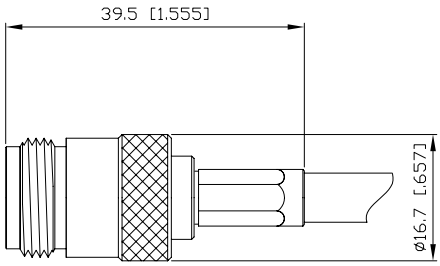

fig.2

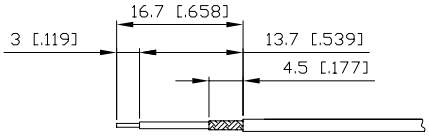

fig.A

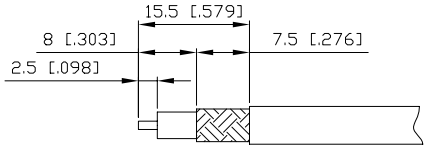

fig.B

CABLE CABLE	*INSTRUC.* INSTRUC.	Ω	*ALFA`R CODE* CODIGO ALFA`R	*FIG.* FIG.		*CRIMPING TOOL* HERRAMIENTA CRIMP
RG-178; RG-196	INS 8	50	A-NI-10C18-50	1	A	A-EIN-C-1-C62
RG-316			A-NI-10C25A-50			A-EIN-C-1-642
RG-174; RG-188			A-NI-10C26-50			
RG-58; RG-141; RG-303	INS 9		A-NI-10C50-50	2	B	A-EIN-C-1-342
RG-142; RG-400			A-NI-10C50A-50			
RG-223			A-NI-10C54-50			
S04272-B			A-NI-10C55-50			
LMR-240			A-NI-10C61D-50			

POLARIDAD INVERTIDA
hembra recta crimp

REVERSE POLARITY
straight crimp type jack

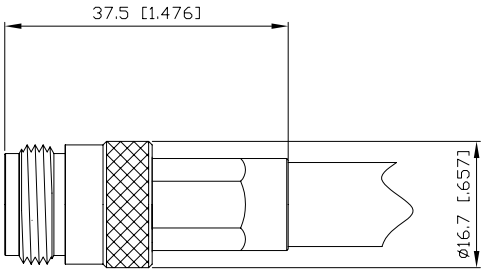

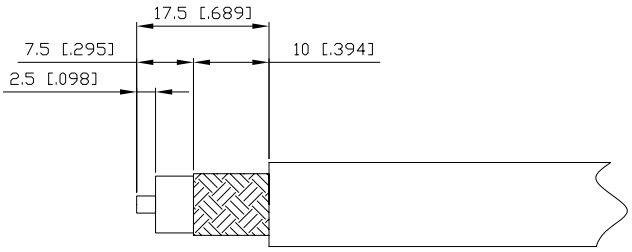

CABLE CABLE	*INSTRUC.* INSTRUC.	Ω	*ALFA`R CODE* CODIGO ALFA`R	*CRIMPING TOOL* HERRAMIENTA CRIMP
RG-393	INS 9	50	A-NI-10C99-50	A-EIN-C-2-D2
ECO FLEX-10			A-NI-10C100-50	
RG-8			A-NI-10C101-50	
RG-213			A-NI-10C103-50	
LMR-400; RG-165			A-NI-10C103D-50	
RG-214			A-NI-10C108-50	
RG-225			A-NI-10C109-50	

POLARIDAD INVERTIDA
hembra recta panel crimp
(montaje frontal)

REVERSE POLARITY
straight crimp type jack panel
(front mounting bulkhead)

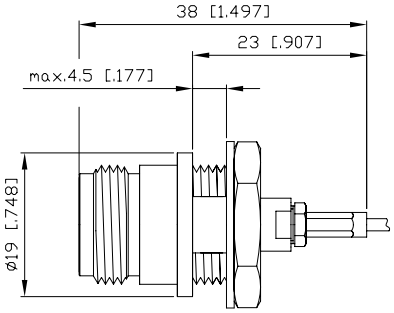

fig. 1

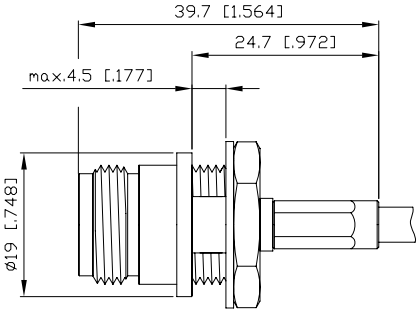

fig. 2

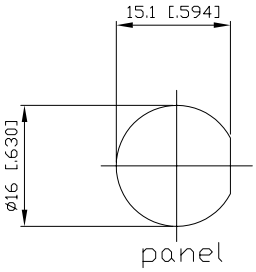

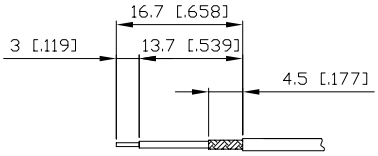

fig. A

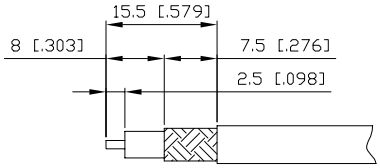

fig. B

CABLE CABLE	*INSTRUC.* INSTRUC.	Ω	*ALFA`R CODE* CÓDIGO ALFA`R	*FIG.* FIG.		*CRIMPING TOOL* HERRAMIENTA CRIMP
RG-178; RG-196	INS 8	50	A-NI-15C18-50	1	A	A-EIN-C-1-C62
RG-316			A-NI-15C25A-50			A-EIN-C-1-642
RG-174; RG-188			A-NI-15C26-50			
RG-58; RG-141; RG-303	INS 9		A-NI-15C50-50	2	B	A-EIN-C-1-342
RG-142; RG-400			A-NI-15C50A-50			
RG-223			A-NI-15C54-50			
S 04272 B			A-NI-15C55-50			
LMR-240			A-NI-15C61D-50			

POLARIDAD INVERTIDA
hembra recta panel crimp
(montaje frontal)

REVERSE POLARITY
straight crimp type jack panel
(front mounting bulkhead)

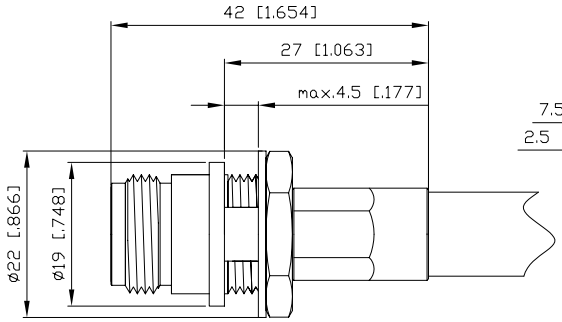

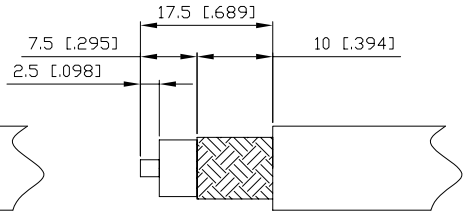

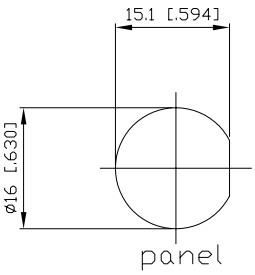

CABLE CABLE	*INSTRUC.* INSTRUC.	Ω	*ALFA`R CODE* CÓDIGO ALFA`R	*CRIMPING TOOL* HERRAMIENTA CRIMP
RG-393	INS 9	50	A-NI-15C99-50	A-EIN-C-2-D2
ECO FLEX-10			A-NI-15C100-50	
RG-8			A-NI-15C101-50	
RG-213			A-NI-15C103-50	
LMR-400; RG-165			A-NI-15C103D-50	
RG-214			A-NI-15C108-50	
RG-225			A-NI-15C109-50	

ALFA`R